YAMAHA

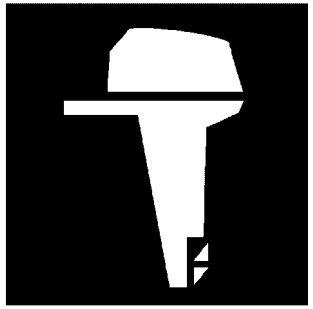

PARTS CATALOGUE
CATALOGO DE REPUESTOS

F400A'25 (6LB4)
F450A'25 (6KN4)
FL400A'25 (6LC4)
FL450A'25 (6KP4)

YAMAHA
GENUINE
Parts & Accessories

1Z6LB-200SA

( )

F400A/F450A
FL400A/FL450A
PARTS CATALOGUE
©2025 by Yamaha Motor Co., Ltd.
1st edition, September 2025
All rights reserved.
Any reprinting or unauthorized use
without the written permission of
Yamaha Motor Co., Ltd.
is expressly prohibited.
Printed in Japan.

F400A/F450A
FL400A/FL450A
CATALOGO DE REPUESTOS
©2025 por Yamaha Motor Co., Ltd.
1ª edición, septiembre 2025
Todos los derechos reservados.
Toda reproducción o uso no autorizado
sin el consentimiento escrito de
Yamaha Motor Co., Ltd.
quedan expresamente prohibidos
Impreso en Japón.

FOREWORD

This Parts Catalogue is related to the parts for the model(s) on the cover page. When you are ordering replacement parts, please refer to this Parts Catalogue and quote both part numbers and part names correctly.

1. Modifications or additions which have been made after the issue of the Parts Catalogue will be announced in the Parts News.
   It is advisable that you make the necessary corrections to the Parts Catalogue according to the Parts News.

2. Abbreviations
   The following abbreviations are used in this Parts Catalogue.
   "UR" Use specified parts number.
   "UN" Use as many as needed.
   "AP" Alternate Parts
   "LM" Locally Made (Parts need to be ordered locally)
   "F#" Frame No. (Applicable machine No.)
   "O/S" Over Size

3. The number of components for assembly
   - Parts, which are to be supplied in an assembly, are listed with a dot (.) in front of the part name as shown below.
   - The numeral appearing to the right of each component part indicates the quantity of parts for each assembly unit.

PART NO.	DESCRIPTION	Q'TY	REMARKS
2F5–83310–60	FRONT FLASHER LIGHT ASSY	2	
115–83311–60	.BULB (6V–18W)	1	

4. Applicable colours of graphics are represented in the "REMARKS" as shown below.

PART NO.	DESCRIPTION	Q'TY	REMARKS
2N4–24110–00–X5	FUEL TANK COMP.	2	MXR
3J1–24240–10	.GRAPHIC, FUEL TANK	1	FOR MXR

5. Note that the illustrations for reference in finding parts numbers are not to be used for assembling. When assembling, please use the applicable service manual.

6. The asterisk (*) before a reference number indicates modified items after the first edition.

7. Applicable Serial No.
   Engine Serial No.

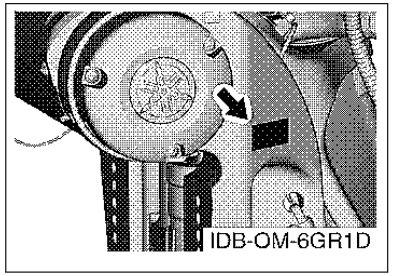

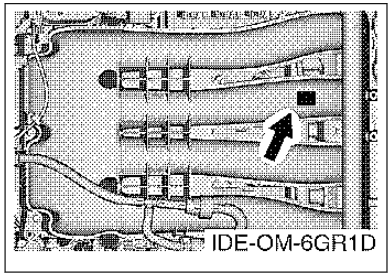

8. Applicable Engine Starting Serial No.

Model	Serial No.	Model	Serial No.
F450A	6KN-1004980	F400A	6LB-1000081
FL450A	6KP-1000131	FL400A	6LC-1000003

9. Applicable Colour Code

Abbreviation	Colour Name	Colour Code
DBN1	DARK BLUISH GRAY 1	008D
WPA	WHITE PEARL A	00CE

10. Quantity Column Information

Column No.	Name Of Q'ty Column	Applicable Model
1	6KN4	F450AVT, F450AVT2
2	6LB4	F400AST
3	6KP4	FL450AVT, FL450AVT2
4	6LC4	FL400AST

PROLOGO

Este catálogo de repuestos corresponde a las piezas para el o los modelos que figuran en la página de portada. Al formular el pedido de repuestos, se ruega citar este catálogo y especificar correctamente el número y el nombre de las piezas.

1. Las modificaciones y agregados que se hayan realizado después de la edición de este Catálogo de Repuestos, serán anunciados en las Informaciones de Recambios.
   Es recomendable que se hagan las correcciones necesarias en el Catálogo de Repuestos de acuerdo con las Informaciones de Recambios.

2. Abreviaciones
   En este. Catálogo de Repuestos se emplean las siguientes abreviaciones.
   "UR" Usar el número de partes especificado
   "UN" Usar la cantidad necesaria
   "AP" Piezas sustitutivas
   "LM" Fabricación local (Hay que pedir los repuestos en las cercanías)
   "F#" Nº de bastidor (Nº aplicable a la máquina)
   "O/S" Sobredimensionado

3. La cantidad de componentes para el montaje
   - Los componentes, suministrados como conjunto, se describen con un punto (.) que precede al nombre del parte como se indica a continuación.
   - La numeración que aparece a la derecha de cada descripción indica la cantidad de partes por cada unidad de conjunto.

CODIGO Nº	DESCRIPCION	CANT.	OBSERVACIONES
2F5–83310–60	ENSAMBLAJE DE LA LUZ	2	
115–83311–60	.BOMBILLA (6V–18W)	1	

4. Los colores de los componentes se indican como sigue en la columna de "OBSERVACIONES".

CODIGO Nº	DESCRIPCION	CANT.	OBSERVACIONES
2N4–24110–00–X5	COMP. DEL TANQUE	2	MXR
3J1–24240–10	.GRAFICO, DEL TANQUE	1	PARA MXR

5. Debe tenerse en cuenta que las ilustraciones sirven como guia para la búsqueda de los números de partes y no deben usarse para el montaje. Durante el montaje, se recomienda usar el manual de taller correspondiente.

6. EL asterisco (*) antes del número de referencia indica los elementos modificados después de la primera edición.

7. Números de serie
   Nº de Serie del motor

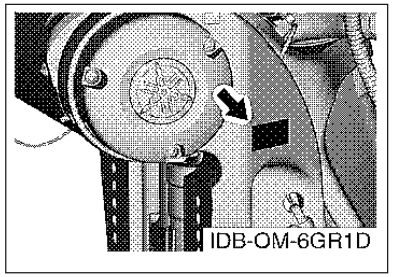

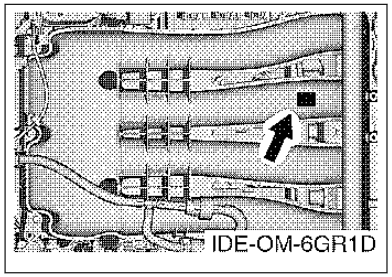

8. Números de serie del motor

Modelo	Nº de serie	Modelo	Nº de serie
F450A	6KN-1004980	F400A	6LB-1000081
FL450A	6KP-1000131	FL400A	6LC-1000003

9. Códigos de color aplicables

Abreviatura	Nombre de color	Código de color
DBN1	DARK BLUISH GRAY 1	008D
WPA	WHITE PEARL A	00CE

10. Informacion para la columna de cantidades

Columna Nº	Nombre de la columna de cantidades	Modelo aplicable
1	6KN4	F450AVT, F450AVT2
2	6LB4	F400AST
3	6KP4	FL450AVT, FL450AVT2
4	6LC4	FL400AST

CONTENTS

SCHEDULED SERVICE PARTS....1
TOP COWLING....2
CYLINDER & CRANKCASE 1....4
CRANKSHAFT & PISTON....6
CYLINDER & CRANKCASE 2....8
CYLINDER & CRANKCASE 3....10
CYLINDER & CRANKCASE 4....11
VALVE 1....12
VALVE 2....14
INTAKE....15
THROTTLE BODY ASSY....16
OIL PUMP....17
EXHAUST 1....18
EXHAUST 2....19
VAPOR SEPARATOR....21
FUEL 1....22
FUEL 2....24
FUEL 3....25
FUEL 4....27
GENERATOR....28
ELECTRICAL 1....30
ELECTRICAL 2....32
ELECTRICAL 3....34
ELECTRICAL 4....35
ELECTRICAL 5....37
ELECTRICAL 6....38
ELECTRICAL 7....39
STARTING MOTOR....40
BOTTOM COWLING 1....41
BOTTOM COWLING 2....43
BOTTOM COWLING 3....45
BOTTOM COWLING 4....46
GRAPHIC & TOOL....47
CONTROL....48
BRACKET 1....49
BRACKET 2....51
BRACKET 3....53
POWER TRIM & TILT ASSY 1....55
POWER TRIM & TILT ASSY 2....57
UPPER CASING 1....59
UPPER CASING 2....61
UPPER CASING 3....62
OIL PAN....63
LOWER CASING & DRIVE 1....65
LOWER CASING & DRIVE 2....68
LOWER CASING & DRIVE 3....71
LOWER CASING & DRIVE 4....73
LOWER CASING & DRIVE 5....76
LOWER CASING & DRIVE 6....79
OPTIONAL PARTS 1....81
OPTIONAL PARTS 2....82
OPTIONAL PARTS 3....83
OPTIONAL PARTS 4....84
OPTIONAL PARTS 5....85
REPAIR KIT 1....86
REPAIR KIT 2....87

INDEX

NUMERICAL INDEX....89

CONTENIDO

PARTES DE REPUESTO TEMPORALES..... 1
SOPORTE SUPERIOR..... 2
CILINDRO & CARTER 1..... 4
CIGUENAL & PISTON.....6
CILINDRO & CARTER 2..... 8
CILINDRO & CARTER 3..... 10
CILINDRO & CARTER 4..... 11
VALVULA 1.....12
VALVULA 2.....14
ADMISION.....15
CAJA DE ACELERADOR COMPL.....16
BOMBA DE ACEITE.....17
DESCARGA 1.....18
DESCARGA 2.....19
SEPARADOR DE VAPOR.....21
COMBUSTIBLE 1.....22
COMBUSTIBLE 2.....24
COMBUSTIBLE 3.....25
COMBUSTIBLE 4.....27
GENERADOR.....28
EQUIPO ELECTRICO 1..... 30
EQUIPO ELECTRICO 2..... 32
EQUIPO ELECTRICO 3..... 34
EQUIPO ELECTRICO 4..... 35
EQUIPO ELECTRICO 5..... 37
EQUIPO ELECTRICO 6..... 38
EQUIPO ELECTRICO 7..... 39
MOTOR DE ARRANQUE.....40
CUBIERTA INFERIOR 1..... 41
CUBIERTA INFERIOR 2..... 43
CUBIERTA INFERIOR 3..... 45
CUBIERTA INFERIOR 4..... 46
CALCAMONIA.....47
CONTROL..... 48
SOPORTE 1..... 49
SOPORTE 2..... 51
SOPORTE 3..... 53
COMPONER Y PODER VARILLA 1.....55
COMPONER Y PODER VARILLA 2.....57
FUNDA SUPERIOR 1.....59
FUNDA SUPERIOR 2.....61
FUNDA SUPERIOR 4.....62
OIL PAN.....63
IMPULSOR E INFERIOR 1..... 65
IMPULSOR E INFERIOR 2..... 68
IMPULSOR E INFERIOR 3..... 71
IMPULSOR E INFERIOR 4..... 73
IMPULSOR E INFERIOR 5..... 76
IMPULSOR E INFERIOR 6..... 79
PARTES OPCIONALES 1.....81
PARTES OPCIONALES 2.....82
PARTES OPCIONALES 3.....83
PARTES OPCIONALES 4.....84
PARTES OPCIONLES 5..... 85
ESTUCHE REPARATION 1..... 86
ESTUCHE REPARATION 2..... 87

INDICE

INDICE NUMERICO.....89

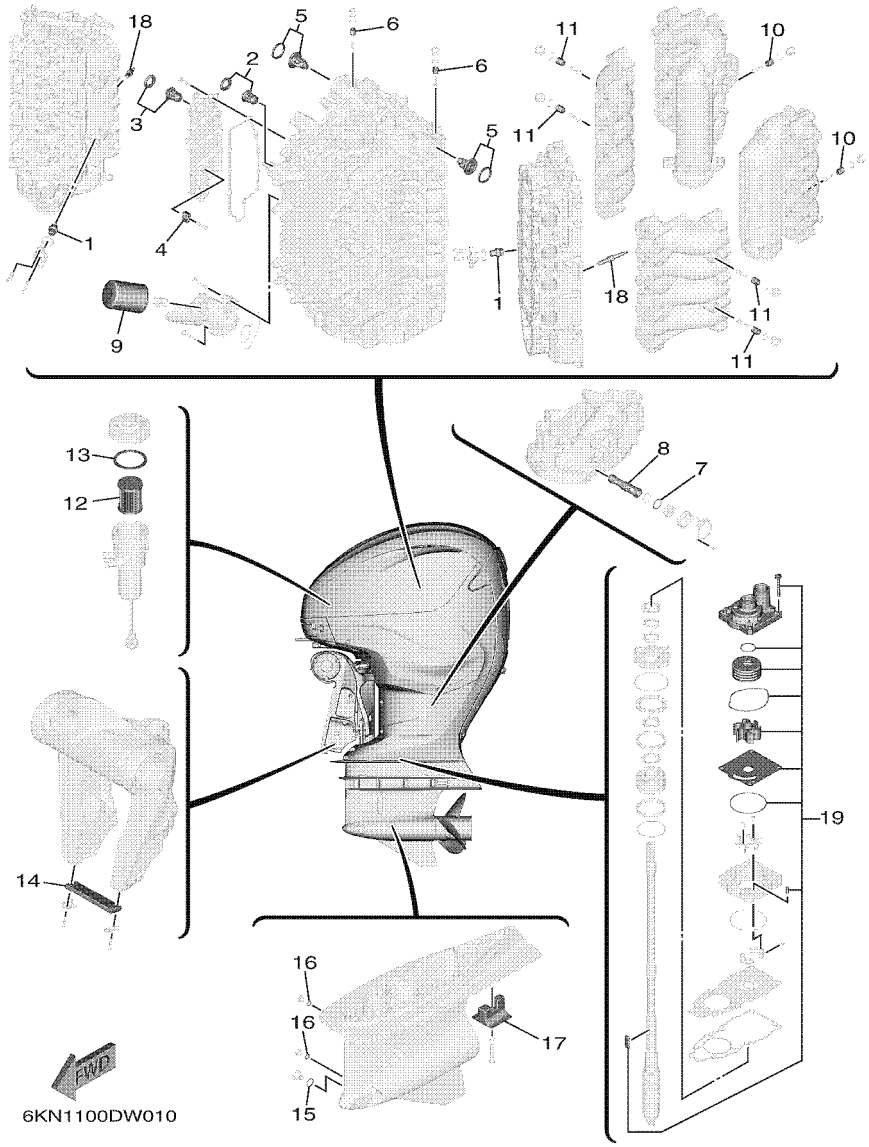

FIG. 1 SCHEDULED SERVICE PARTS — PARTES DE REPUESTO TEMPORALES

REF. NO.	PART NO. CODIGO Nº	DESCRIPTION DESCRIPCION	6KN4	6LB4	6KP4	6LC4		REMARKS OBSERVACIONES
1	6ML–11325–00	ANODE ANODO	4	4	4	4		
2	6H3–12411–20	THERMOSTAT TERMOSTAT	1	1	1	1		
3	66M–12411–01	THERMOSTAT TERMOSTAT	1	1	1	1		
4	6AW–1132P–00	ANODE 5 ANODO 5	3	3	3	3		
5	6GR–12411–00	THERMOSTAT TERMOSTAT	2	2	2	2		
6	6G8–11325–00	ANODE ANODO	2	2	2	2		
7	93210–34633	O-RING ANILLO O	1	1	1	1		
8	6GR–13411–00	STRAINER, OIL FILTRO DE ACEITE	1	1	1	1		
9	N26–13440–04	ELEMENT ASSY, OIL CLEANER ELEMENTO FILTRO DE ACEITE	1	1	1	1		
10	6G8–11325–00	ANODE ANODO	2	2	2	2		
11	6G8–11325–00	ANODE ANODO	4	4	4	4		
12	6P3–24563–02	ELEMENT, FILTER ELEMENTO DEL FILTRO	1	1	1	1		
13	6P3–24564–00	GASKET EMPAQUE	1	1	1	1		
14	6AW–45251–00	ANODE CATODE	1	1	1	1		
15	93210–19123	O-RING ANILLO O	1	1	1	1		
16	93210–09165	O-RING ANILLO O	2	2	2	2		
17	6AW–45373–00	ANODE ANODO	1	1	1	1		
18	94702–00447	PLUG, SPARK (NGK ILMAR7H9) BUJIA (NGK ILMAR7H9)	8	8	8	8		
19	6GR–W0078–01	WATER PUMP REPAIR KIT ESTUCHE REPARACION BOMBA AGUA	1	1	1	1		

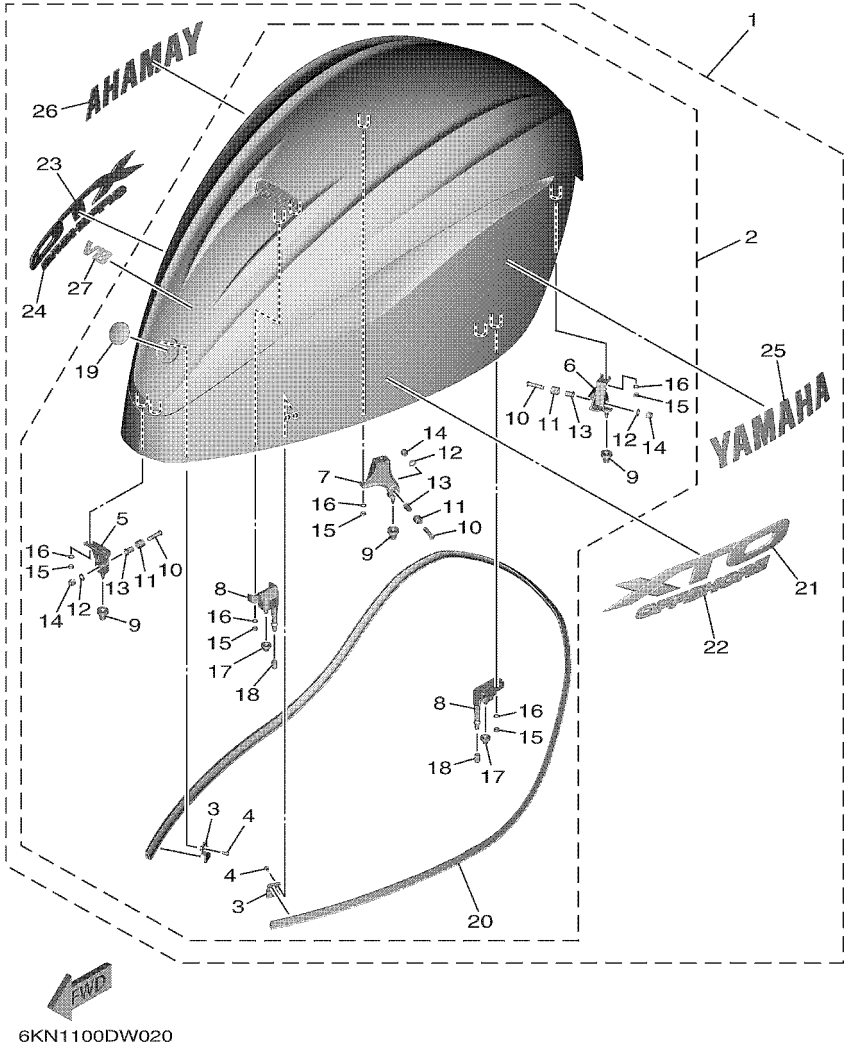

FIG. 2 TOP COWLING — SOPORTE SUPERIOR

REF. NO.	PART NO. CODIGO Nº	DESCRIPTION DESCRIPCION	6KN4	6LB4	6KP4	6LC4		REMARKS OBSERVACIONES
1	6KN–42610–00–8D	TOP COWLING ASSY SOPORTE SUPERIOR COMPL.	1	1	1	1		UR GRAY UR GRAY
	6KN–42610–00–CE	TOP COWLING ASSY SOPORTE SUPERIOR COMPL.	1		1			UR WHITE UR WHITE
2	6KN–4261A–00–8D	.TOP COWLING W/O GRAPHICS .SOPORTE SUPERIOR SIN GRAFICOS	1	1	1	1		UR GRAY UR GRAY
	6KN–4261A–00–CE	.TOP COWLING W/O GRAPHICS .SOPORTE SUPERIOR SIN GRAFICOS	1		1			UR WHITE UR WHITE
3	6GR–42477–00	..PLATE, LOCK ..PLACA DE CIERRE	2	2	2	2		
4	97985–05210	..SCREW, WITH WASHER ..TORNILLO, CON ARANDELA	4	4	4	4		
5	6GR–42647–00	..HOLDER, CLAMP BAND ..MORDAZA DE ABRAZADERA	1	1	1	1		
6	6GR–42648–00	..HOLDER, CLAMP BAND ..MORDAZA DE ABRAZADERA	1	1	1	1		
7	6GR–42649–00	..HOLDER, CLAMP BAND ..MORDAZA DE ABRAZADERA	1	1	1	1		
8	6GR–42643–00	..PLATE, CLAMP ..PLACA GRAMPA	2	2	2	2		
9	6AW–42663–01	..DAMPER 2 ..AMORTIGUADOR 2	3	3	3	3		
10	90111–08078	..BOLT, HEXAGON SOCKET BUTTON ..TORNILLO	3	3	3	3		
11	90387–10094	..COLLAR ..ESPACIADOR	3	3	3	3		
12	92990–08600	..WASHER, PLATE ..ARANDELA PLANA	3	3	3	3		
13	90387–08M45	..COLLAR ..ESPACIADOR	3	3	3	3		
14	95780–08300	..NUT, FLANGE ..TUERCA	3	3	3	3		
15	95380–06600	..NUT, HEXAGON ..TUERCA	10	10	10	10		
16	92990–06100	..WASHER, SPRING ..ARANDELA PLANA	10	10	10	10		
17	663–42662–01	..DAMPER ..AMORTIGUADOR	2	2	2	2		
18	67F–13448–00	..CAP ..TAPA	2	2	2	2		
19	6LB–42697–00	..TUNING FORK MARK ..MARCA, YAMAHA	1	1	1	1		
20	6KN–42629–00	..SEAL ..SELLO 2	1	1	1	1		
21	6KN–42675–00	.GRAPHIC, SIDE 1 .CALCAMONIA LATERAL 1	1	1	1	1		
22	6KN–53184–00	.GRAPHIC, 1 .GRAFICO, 1	1	1	1	1		
23	6KN–42676–00	.GRAPHIC, SIDE 2 .CALCAMONIA LATERAL 2	1	1	1	1		
24	6KN–53185–00	.GRAPHIC, 2 .GRAFICO, 2	1	1	1	1		
25	6KN–2153A–00	.EMBLEM, YAMAHA .EMBLEMA, YAMAHA	1	1	1	1		

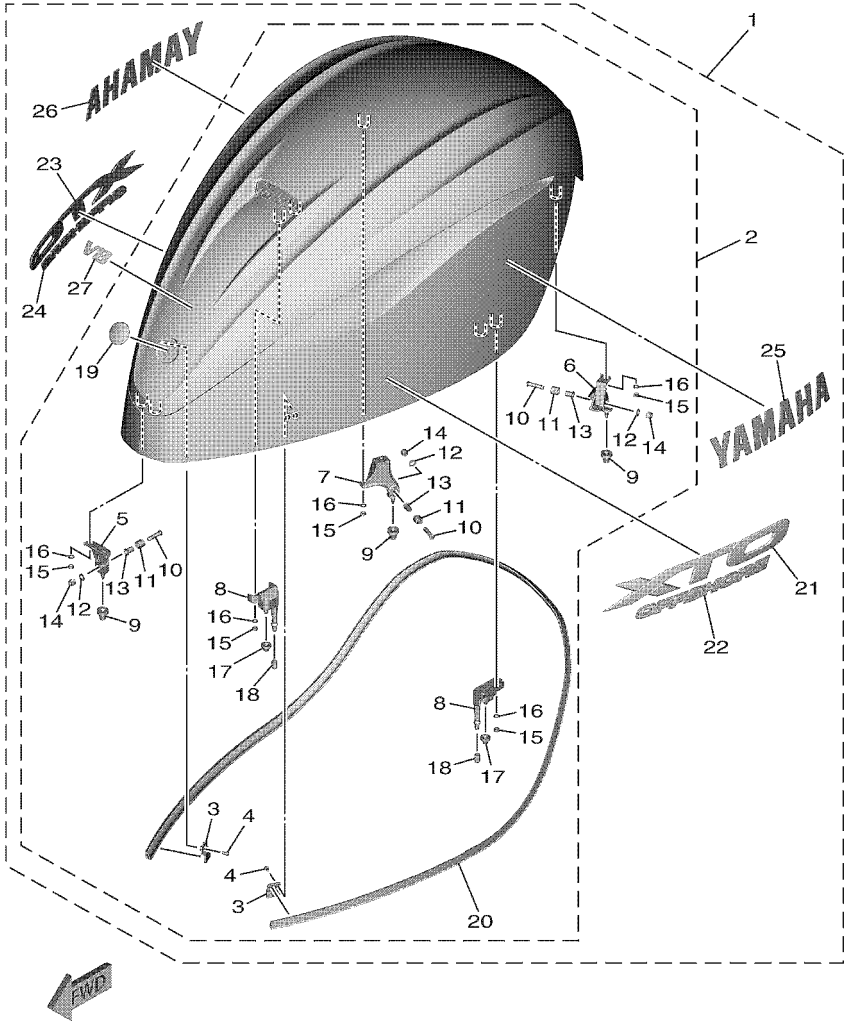

6KN1100DW020

FIG. 2 TOP COWLING — SOPORTE SUPERIOR

REF. NO.	PART NO. CODIGO Nº	DESCRIPTION DESCRIPCION	6KN4	6LB4	6KP4	6LC4		REMARKS OBSERVACIONES
26	6KN–2153B–00	.EMBLEM, YAMAHA .EMBLEMA, YAMAHA	1	1	1	1		
27	6GR–42677–00	.GRAPHIC, FRONT .CALCAMONIA FRONTAL	1	1	1	1		

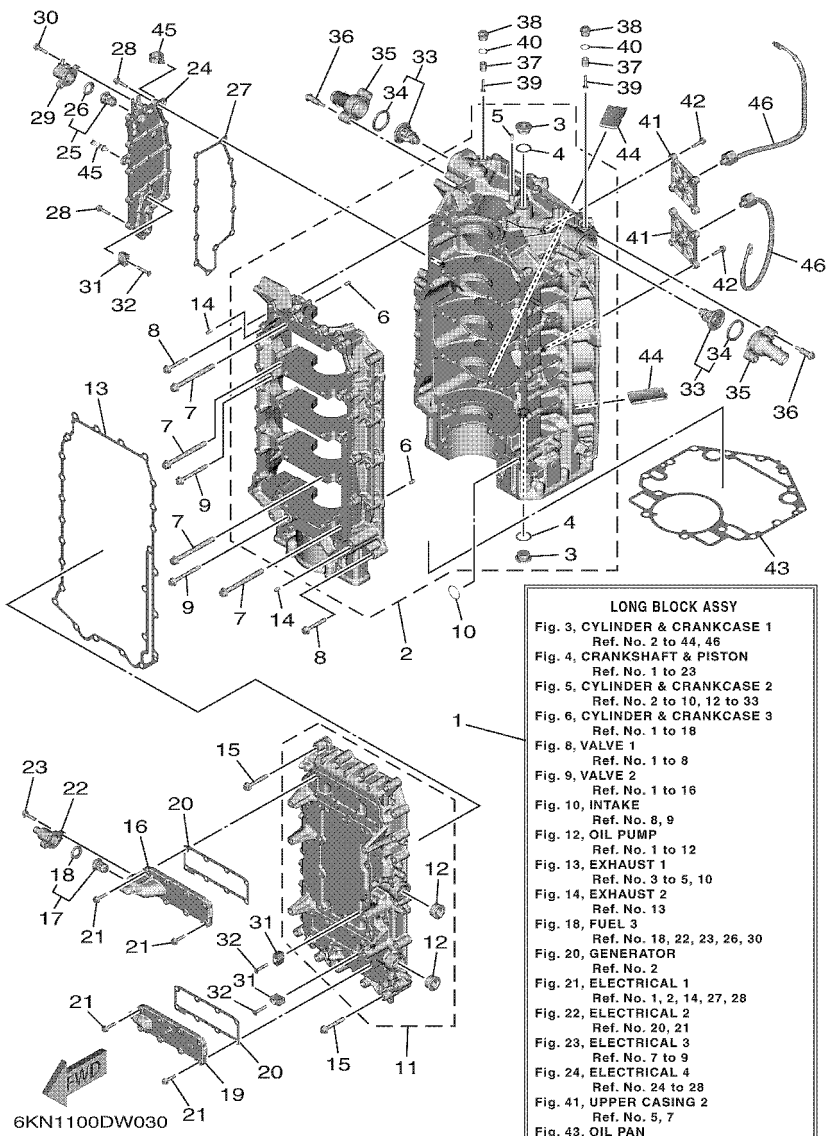

FIG. 3 CYLINDER & CRANKCASE 1 — CILINDRO & CARTER 1

REF. NO.	PART NO. CODIGO Nº	DESCRIPTION DESCRIPCION	6KN4	6LB4	6KP4	6LC4		REMARKS OBSERVACIONES
1	6KN–11000–00	LONG BLOCK ASSY SUBENSAMBLAJE DEL MOTOR	1	1	1	1		
2	6KN–15109–00–9S	CRANKCASE ASSY CARTER COMPLETO	1	1	1	1		
3	90340–24001	.PLUG, STRAIGHT SCREW .TORNILLO, DE DRENAJE	2	2	2	2		
4	90430–24239	.GASKET .JUNTA	2	2	2	2		
5	93606–12019	.PIN, DOWEL .PASADOR DE CLAVIJA	1	1	1	1		
6	93606–12019	.PIN, DOWEL .PASADOR DE CLAVIJA	10	10	10	10		
7	6P2–15187–00	BOLT PERNO	20	20	20	20		
8	90105–08175	BOLT, FLANGE TORNILLO	10	10	10	10		
9	90105–08220	BOLT, FLANGE TORNILLO	6	6	6	6		
10	93210–26658	O-RING ANILLO O	1	1	1	1		
11	6KN–15411–01–9S	COVER, CRANKCASE 1 CUBIERTA DE CARTER 1	1	1	1	1		
12	90340–27001	.PLUG, STRAIGHT SCREW .TORNILLO, DE DRENAJE	2	2	2	2		
13	6GR–15451–01	GASKET, CRANKCASE COVER 1 EMPAQ DE CUBIERTA DE CARTER	1	1	1	1		
14	93606–12019	PIN, DOWEL PASADOR DE CLAVIJA	2	2	2	2		
15	90105–08175	BOLT, FLANGE TORNILLO	26	26	26	26		
16	6GR–15414–01–9S	COVER 1 CUBIERTA 1	1	1	1	1		
17	6H3–12411–20	THERMOSTAT TERMOSTAT	1	1	1	1		
18	6H3–12412–10	.SEAL, THERMOSTAT .SELLO TERMOSTATO	1	1	1	1		
19	6GR–15423–00–9S	COVER 2 CUBIERTA 2	1	1	1	1		
20	6GR–1131B–00	GASKET, COVER EMPAQUE DE CUBIERTA	2	2	2	2		
21	90105–06037	BOLT, FLANGE TORNILLO	16	16	16	16		
22	6KN–12417–00–9S	HOUSING, THERMOSTAT ENCAJE DE TERMOSTATO	1	1	1	1		
23	90105–06037	BOLT, FLANGE TORNILLO	2	2	2	2		
24	6GR–15413–01–9S	COVER CUBIERTA	1	1	1	1		
25	66M–12411–01	THERMOSTAT TERMOSTAT	1	1	1	1		
26	688–12412–00	.SEAL, THERMOSTAT .SELLO TERMOSTATO	1	1	1	1		
27	6GR–15353–00	GASKET, DRAIN JUNTA DE DRENAJE	1	1	1	1		

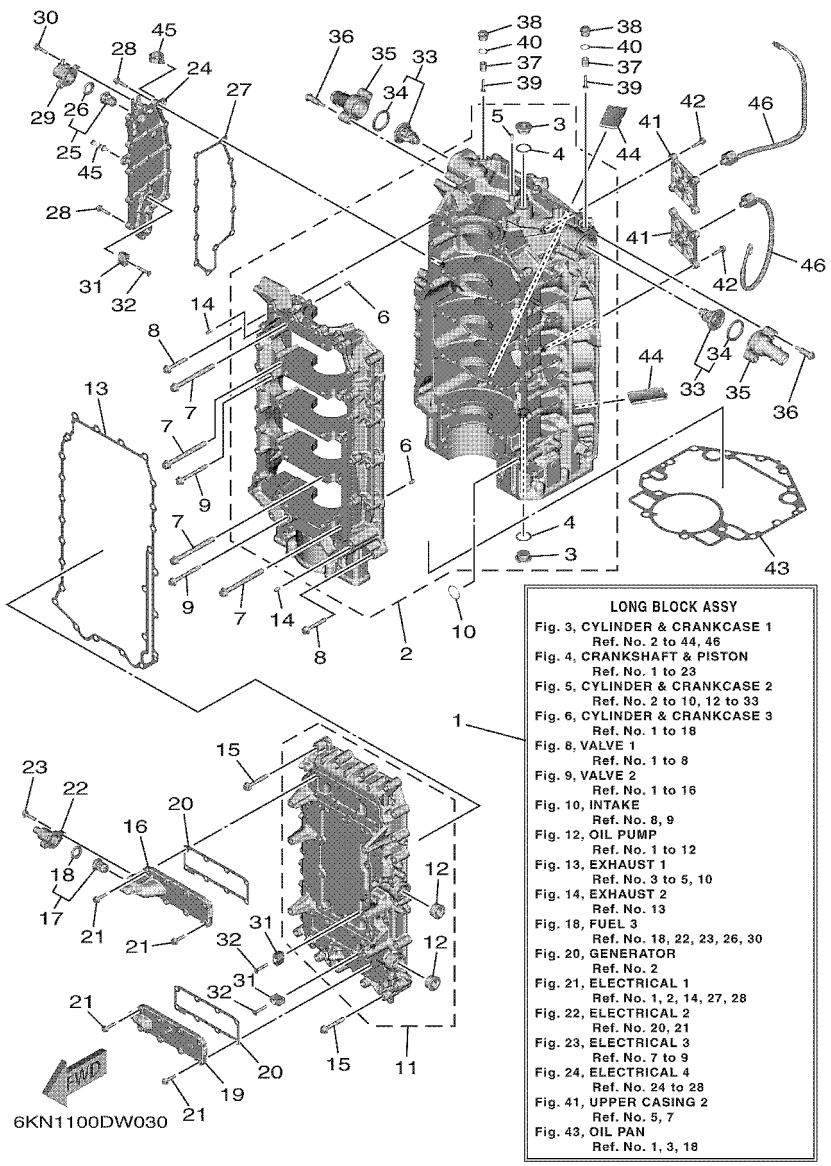

FIG. 3 CYLINDER & CRANKCASE 1 — CILINDRO & CARTER 1

REF. NO.	PART NO. CODIGO Nº	DESCRIPTION DESCRIPCION	6KN4	6LB4	6KP4	6LC4		REMARKS OBSERVACIONES
28	90105–06037	BOLT, FLANGE TORNILLO	12	12	12	12		
29	6GR–1241B–00–9S	COVER, THERMOSTAT 2 CUBIERTA TERMOSTATO 2	1	1	1	1		
30	90105–06037	BOLT, FLANGE TORNILLO	2	2	2	2		
31	6AW–1132P–00	ANODE 5 ANODO 5	3	3	3	3		
32	90151–06069	SCREW, COUNTERSUNK TORNILLO EMBUTIDO	3	3	3	3		
33	6GR–12411–00	THERMOSTAT TERMOSTAT	2	2	2	2		
34	6GR–12412–00	.SEAL, THERMOSTAT .SELLO TERMOSTATO	1	1	1	1		
35	6GR–12413–00	COVER, THERMOSTAT CUBIERTA TERMOSTATO	2	2	2	2		
36	90109–06286	BOLT PERNO	4	4	4	4		
37	6G8–11325–00	ANODE ANODO	2	2	2	2		
38	6G8–11197–A0	PLUG, BLIND TAPON, CIEGO	2	2	2	2		
39	98980–05025	SCREW, BIND TORNILLO DE LIGAR	2	2	2	2		
40	93210–13M63	O-RING ANILLO O	2	2	2	2		
41	6GR–1135A–00	BRACKET SOPORTE	2	2	2	2		
42	90105–06037	BOLT, FLANGE TORNILLO	8	8	8	8		
43	6GR–11351–01	GASKET, CYLINDER JUNTA, DE CILINDRO	1	1	1	1		
44	6GR–14664–01	GROMMET, WATER SHUT TAPON	2	2	2	2		
45	90464–20181	CLAMP BRIDA	2	2	2	2		
46	6CJ–85780–02	SENSOR, KNOCK CHOCAR SENSORIO	2	2	2	2		

FIG. 4 CRANKSHAFT & PISTON — CIGUENAL & PISTON

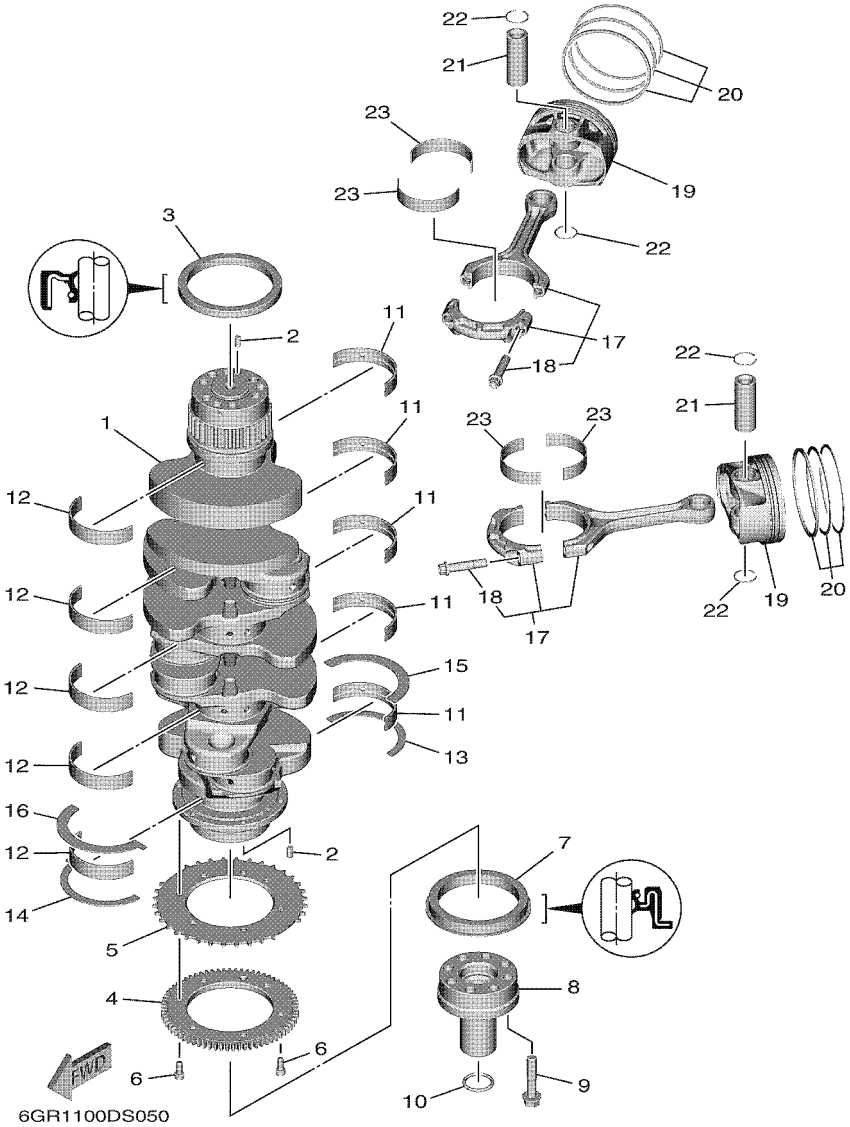

REF. NO.	PART NO. CODIGO Nº	DESCRIPTION DESCRIPCION	6KN4	6LB4	6KP4	6LC4		REMARKS OBSERVACIONES
1	6GR–11411–01	CRANKSHAFT CIGUENAL	1	1	1	1		
2	93606–12019	PIN, DOWEL PASADOR DE CLAVIJA	2	2	2	2		
3	93102–90004	OIL SEAL SELLO ACEITE	1	1	1	1		
4	6GR–13188–00	GEAR, DRIVE ENGRANAJE TRACCION	1	1	1	1		
5	6GR–81673–00	ROTOR ROTOR	1	1	1	1		
6	91317–06014	BOLT, HEXAGON SOCKET HEAD TORNILLO ALLEN	6	6	6	6		
7	93102–85010	OIL SEAL SELLO ACEITE	1	1	1	1		
8	6GR–12199–00	FLANGE BRIDA	1	1	1	1		
9	90105–10446	BOLT, FLANGE TORNILLO	8	8	8	8		
10	93210–260A5	O-RING ANILLO O	1	1	1	1		
11	6GR–11416–00	PLANE BEARING, CRANKSHAFT 1 COJINETE PLANO 1	5	5	5	5		UR BLACK UR BLACK
	6GR–11416–10	PLANE BEARING, CRANKSHAFT 1 COJINETE PLANO 1	5	5	5	5		UR BLUE UR BLUE
	6GR–11416–20	PLANE BEARING, CRANKSHAFT 1 COJINETE PLANO 1	5	5	5	5		UR PINK UR PINK
	6GR–11416–30	PLANE BEARING, CRANKSHAFT 1 COJINETE PLANO 1	5	5	5	5		UR WHITE UR WHITE
12	6GR–11417–00	PLANE BEARING, CRANKSHAFT 2 COJINETE PLANO 2	5	5	5	5		UR BLACK UR BLACK
	6GR–11417–10	PLANE BEARING, CRANKSHAFT 2 COJINETE PLANO 2	5	5	5	5		UR BLUE UR BLUE
	6GR–11417–20	PLANE BEARING, CRANKSHAFT 2 COJINETE PLANO 2	5	5	5	5		UR PINK UR PINK
	6GR–11417–30	PLANE BEARING, CRANKSHAFT 2 COJINETE PLANO 2	5	5	5	5		UR WHITE UR WHITE
13	6CB–11426–03	BEARING, THRUST 1 COJINETE DE EMPUJE 1	1	1	1	1		
14	6CB–11427–03	BEARING, THRUST 2 COJINETE DE EMPUJE 2	1	1	1	1		
15	6GR–11426–00	BEARING, THRUST 1 COJINETE DE EMPUJE 1	1	1	1	1		
16	6GR–11427–00	BEARING, THRUST 2 COJINETE DE EMPUJE 2	1	1	1	1		
17	6GR–W1165–10	CONNECTING ROD ASSY BIELA COMPLETA	8	8	8	8		
18	63P–11654–10	.BOLT, CONNECTING ROD .TORNILLO DE BIELA	2	2	2	2		
19	6KN–11631–00	PISTON (STD) PISTON (NORMA)	8	8	8	8		
20	6GR–11603–00	PISTON RING SET (STD) JUEGO DE ANILLOS (NORMA)	8	8	8	8		
21	6GR–11633–00	PIN, PISTON PASADOR, PISTON	8	8	8	8		

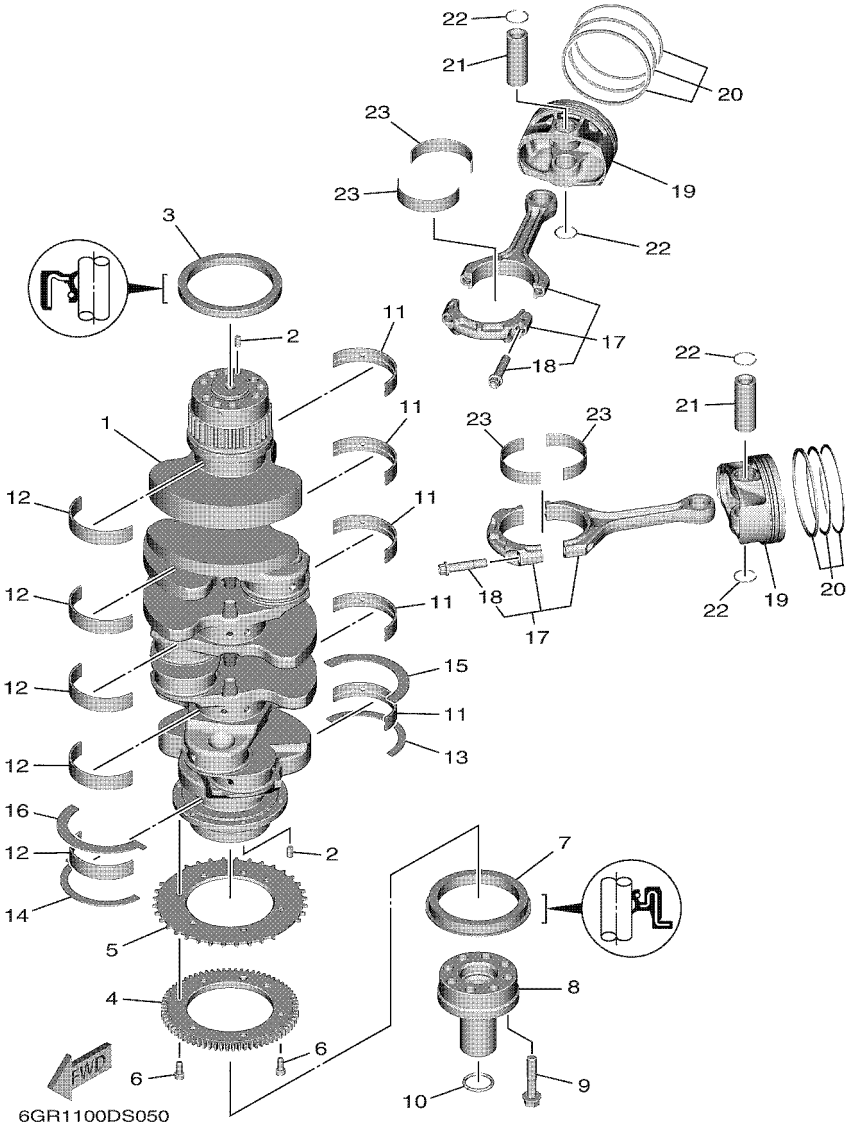

FIG. 4 CRANKSHAFT & PISTON — CIGUENAL & PISTON

REF. NO.	PART NO. CODIGO Nº	DESCRIPTION DESCRIPCION	6KN4	6LB4	6KP4	6LC4		REMARKS OBSERVACIONES
22	6GR–11634–00	CLIP, PISTON PIN PRESILLA, BULON DE PISTON	16	16	16	16		
23	6GR–11656–00	PLANE BEARING, CONNECTING ROD COJINETE PLANO	16	16	16	16		UR YELLOW UR YELLOW
	6GR–11656–10	PLANE BEARING, CONNECTING ROD COJINETE PLANO	16	16	16	16		UR GREEN UR GREEN
	6GR–11656–20	PLANE BEARING, CONNECTING ROD COJINETE PLANO	16	16	16	16		UR BLUE UR BLUE

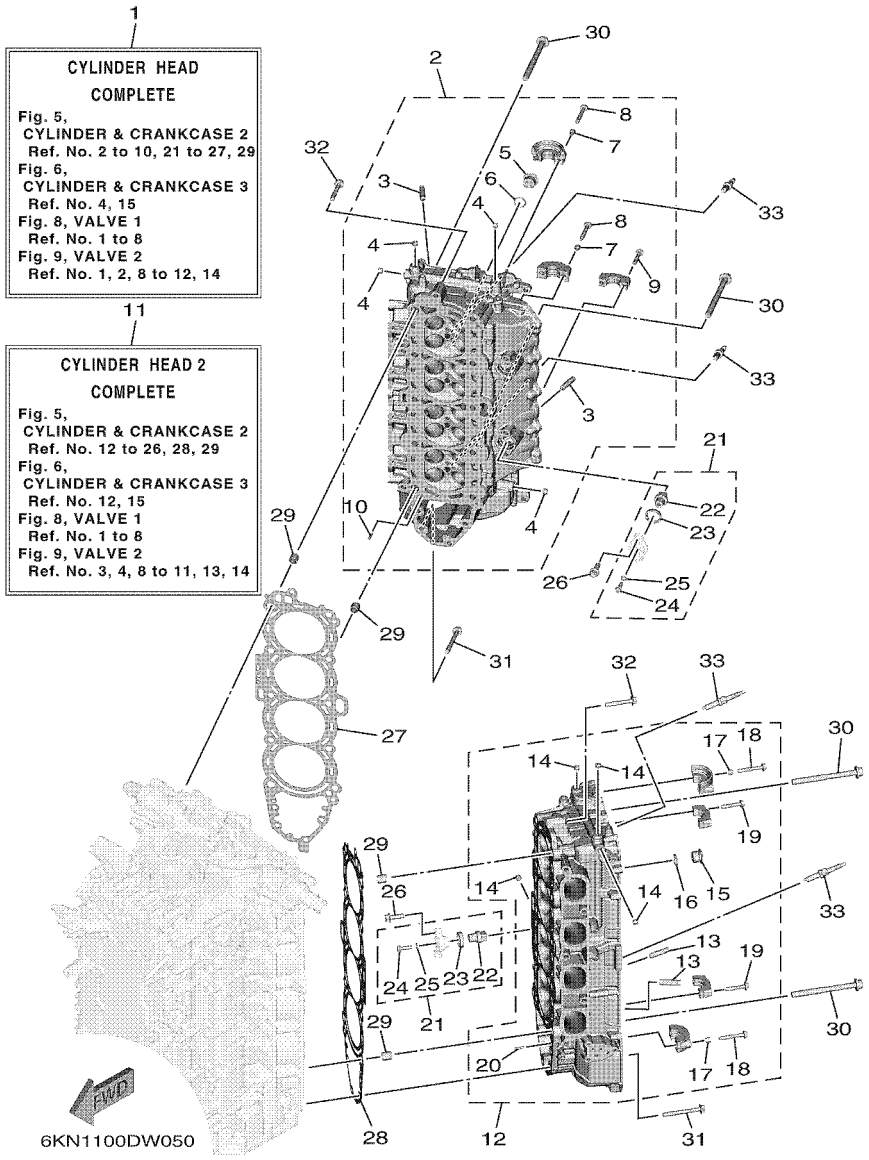

FIG. 5 CYLINDER & CRANKCASE 2 — CILINDRO & CARTER 2

REF. NO.	PART NO. CODIGO Nº	DESCRIPTION DESCRIPCION	6KN4	6LB4	6KP4	6LC4		REMARKS OBSERVACIONES
1	6KN–W009A–01–9S	CYLINDER HEAD COMPLETE CILINDRD CULATA COMPLETO	1	1	1	1		
2	6KN–11110–00	CYLINDER HEAD ASSY CULATA DE CILINDRO COMPLETA	1	1	1	1		
3	6DA–11133–10	.GUIDE, VALVE 1 .GUIA DE VALVULA 1	16	16	16	16		
4	90344–51019	.PLUG, TAPER SCREW .TAPON DE TORNILLO AHUSADO	4	4	4	4		
5	90340–97002	.PLUG, STRAIGHT SCREW .TORNILLO, DE DRENAJE	3	3	3	3		
6	93210–18322	.O-RING .ANILLO O	3	3	3	3		
7	91809–08006	.PIN, DOWEL .PASADOR DE CLAVIJA	4	4	4	4		
8	90119–07235	.BOLT/WASHER-CAM CAPS .TORNILLO CON ARANDELA	4	4	4	4		
9	90119–07234	.BOLT, WITH WASHER .TORNILLO CON ARANDELA	18	18	18	18		
10	91690–40018	.PIN, SPRING .PASADOR DE RESORTE	1	1	1	1		
11	6KN–W009C–01–9S	CYLINDER HEAD 2 COMPLETE CULATA DE CILINDRO COMPL. 2	1	1	1	1		
12	6KN–11120–00	CYLINDER HEAD ASSY 2 CULATA DE CILINDRO COMPL. 2	1	1	1	1		
13	6DA–11133–10	.GUIDE, VALVE 1 .GUIA DE VALVULA 1	16	16	16	16		
14	90344–51019	.PLUG, TAPER SCREW .TAPON DE TORNILLO AHUSADO	4	4	4	4		
15	90340–97002	.PLUG, STRAIGHT SCREW .TORNILLO, DE DRENAJE	3	3	3	3		
16	93210–18322	.O-RING .ANILLO O	3	3	3	3		
17	91809–08006	.PIN, DOWEL .PASADOR DE CLAVIJA	4	4	4	4		
18	90119–07235	.BOLT/WASHER-CAM CAPS .TORNILLO CON ARANDELA	4	4	4	4		
19	90119–07234	.BOLT, WITH WASHER .TORNILLO CON ARANDELA	18	18	18	18		
20	91690–40018	.PIN, SPRING .PASADOR DE RESORTE	1	1	1	1		
21	6ML–11301–00	ANODE COVER ASSY CONJUNTO CUBIERTA DE ANODO	4	4	4	4		
22	6ML–11325–00	.ANODE .ANODO	1	1	1	1		
23	67F–11328–01	.GROMMET, ANODE .TAPON	1	1	1	1		
24	90105–06M07	.BOLT, FLANGE .TORNILLO	1	1	1	1		
25	90430–06M03	.GASKET .JUNTA	1	1	1	1		
26	95D95–08025	BOLT, FLANGE DEEP RECESS CERROJO, REBORDE HUECO PROFUND	8	8	8	8		
27	6KN–11181–00	GASKET, CYLINDER HEAD 1 JUNTA, DE CULATA 1	1	1	1	1		

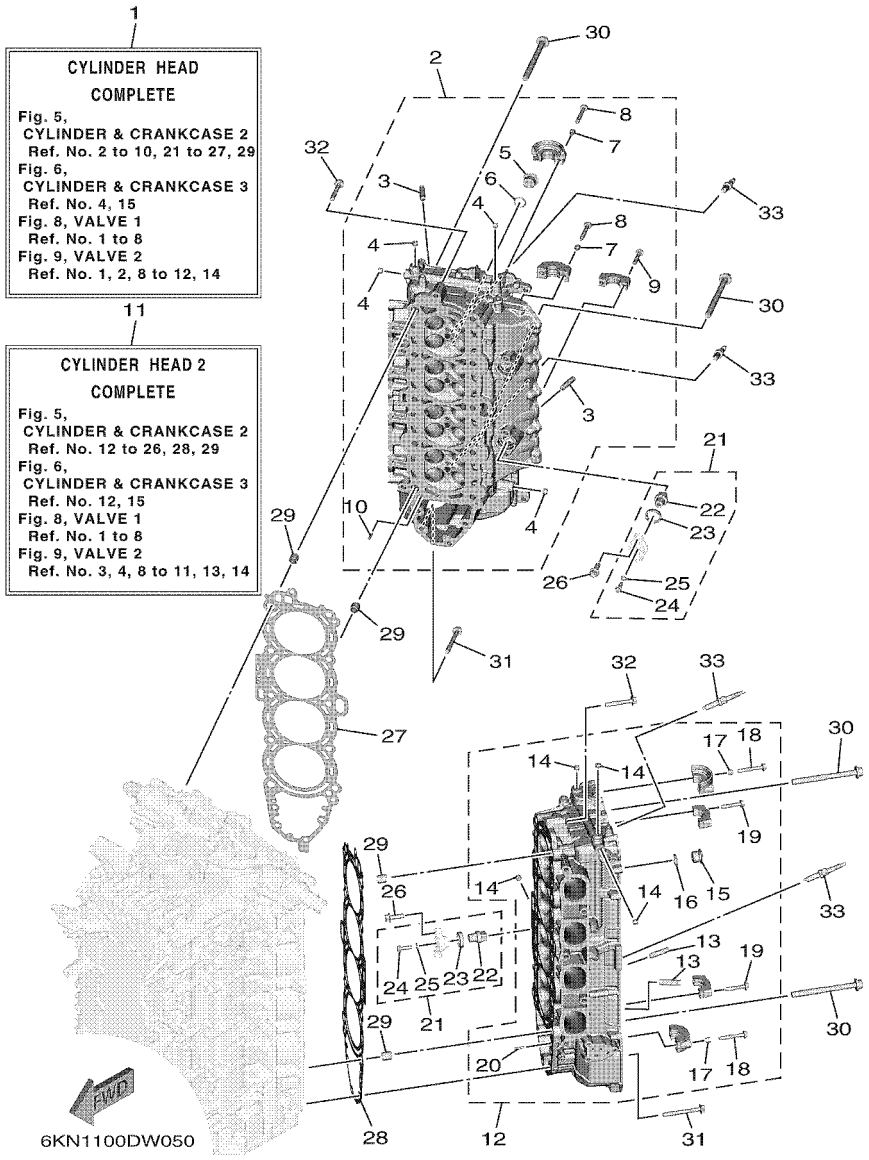

FIG. 5 CYLINDER & CRANKCASE 2 — CILINDRO & CARTER 2

REF. NO.	PART NO. CODIGO Nº	DESCRIPTION DESCRIPCION	6KN4	6LB4	6KP4	6LC4		REMARKS OBSERVACIONES
28	6KN–11182–00	GASKET, CYLINDER HEAD 2 EMPAQUE CULATA DE CILINDRO 2	1	1	1	1		
29	90387–11005	COLLAR ESPACIADOR	4	4	4	4		
30	90149–11001	SCREW TORNILLO DE REGLAJE	20	20	20	20		
31	90105–08220	BOLT, FLANGE TORNILLO	8	8	8	8		
32	90105–08175	BOLT, FLANGE TORNILLO	2	2	2	2		
33	94702–00447	PLUG, SPARK (NGK ILMAR7H9) BUJIA (NGK ILMAR7H9)	8	8	8	8		

FIG. 6 CYLINDER & CRANKCASE 3 — CILINDRO & CARTER 3

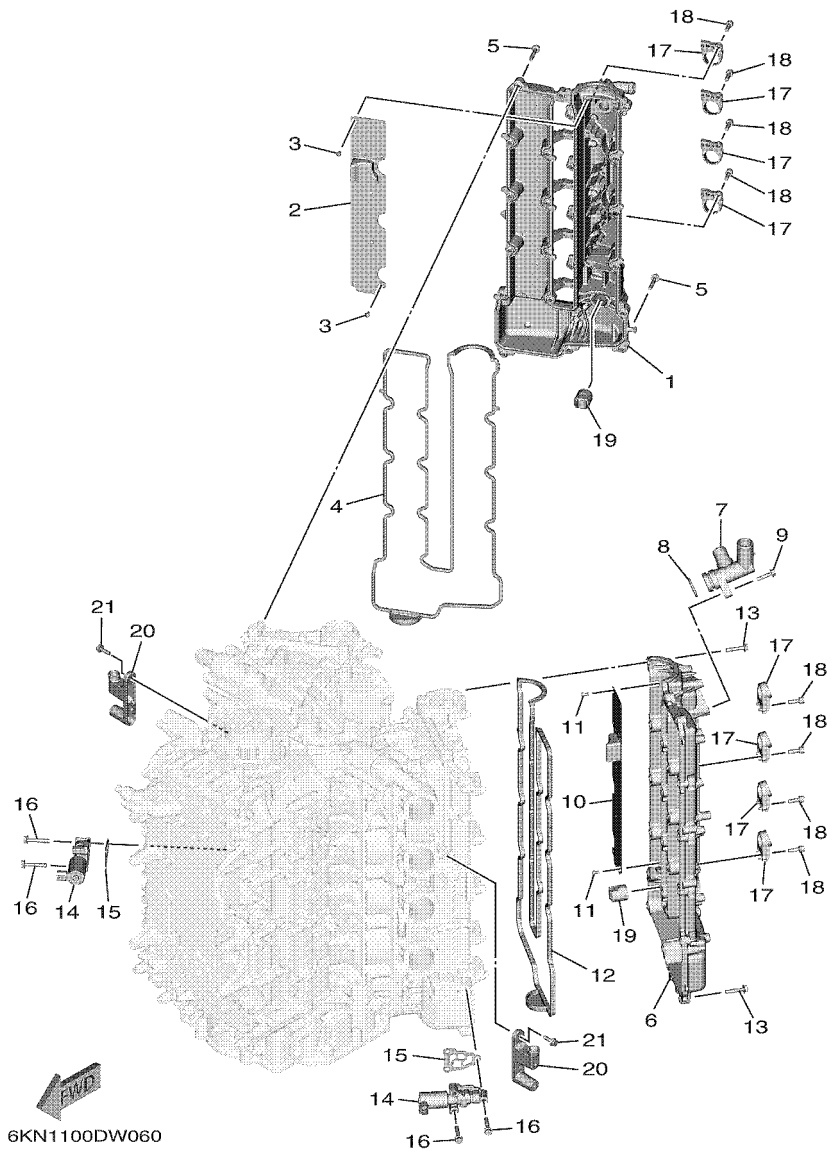

REF. NO.	PART NO. CODIGO Nº	DESCRIPTION DESCRIPCION	6KN4	6LB4	6KP4	6LC4		REMARKS OBSERVACIONES
1	6GR–11191–00–9S	COVER, CYLINDER HEAD 1 TAPA CULATA DE CILINDRO 1	1	1	1	1		
2	6GR–11135–00	PLATE, BREATHER 3 PLACA RESPIRADERO 3	1	1	1	1		
3	97607–04208	SCREW, WITH WASHER TORNILLO CAB CON PLANA C/ARAN	8	8	8	8		
4	6GR–11193–00	GASKET, HEAD COVER 1 EMPAQUE	1	1	1	1		
5	95D95–06030	BOLT, FLANGE DEEP RECESS CERROJO, REBORDE HUECO PROFUND	22	22	22	22		
6	6GR–11192–00–9S	COVER, CYLINDER HEAD 2 TAPA CULATA DE CILINDRO 2	1	1	1	1		
7	6GR–11372–00	NIPPLE, HOSE NIPLE DE MANGUERA	1	1	1	1		
8	93210–28646	O-RING ANILLO O	1	1	1	1		
9	95D95–06025	BOLT, FLANGE DEEP RECESS CERROJO, REBORDE HUECO PROFUND	1	1	1	1		
10	6GR–11136–00	PLATE, BREATHER 4 PLACA RESPIRADERO 4	1	1	1	1		
11	97607–04208	SCREW, WITH WASHER TORNILLO CAB CON PLANA C/ARAN	8	8	8	8		
12	6GR–11194–00	GASKET, HEAD COVER 2 EMPAQUE DE TAPA DE CULATA 2	1	1	1	1		
13	95D95–06030	BOLT, FLANGE DEEP RECESS CERROJO, REBORDE HUECO PROFUND	22	22	22	22		
14	6GR–86120–00	SOLENOID VALVE ASSY VALVULA SOLENOIDE CONJ.	2	2	2	2		
15	6CB–1242F–00	GASKET, FILTER EMPAQUE DE FILTRO	2	2	2	2		
16	90105–06035	BOLT, FLANGE TORNILLO	6	6	6	6		
17	6GR–82316–00	BRACKET, IGNITION COIL SOPORTE BOBINA ENCENDIDO	8	8	8	8		
18	90110–06038	BOLT, HEXAGON SOCKET HEAD TORNILLO ALLEN	16	16	16	16		
19	6GR–11927–00	LIFTER ELEVADOR	2	2	2	2		
20	6GR–42743–00	BRACKET SOPORTE	2	2	2	2		
21	95D95–06020	BOLT, FLANGE DEEP RECESS CERROJO, REBORDE HUECO PROFUND	4	4	4	4		

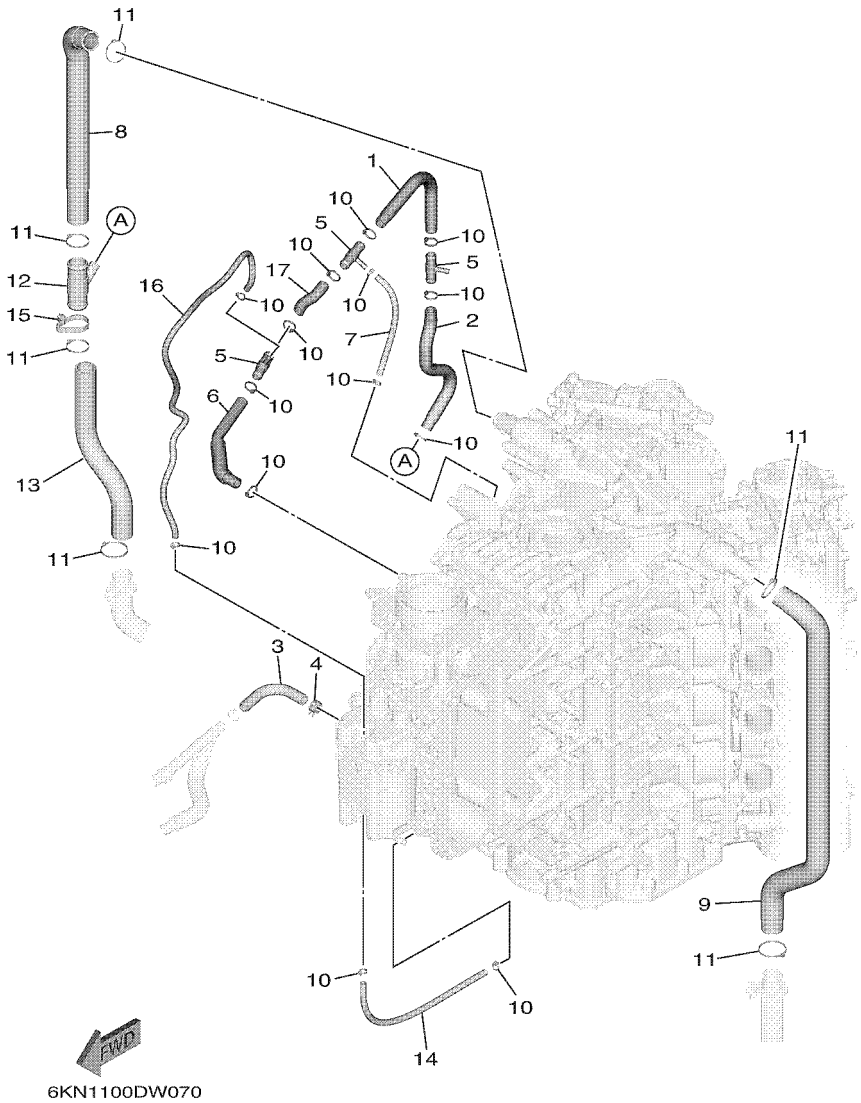

FIG. 7 CYLINDER & CRANKCASE 4 — CILINDRO & CARTER 4

REF. NO.	PART NO. CODIGO Nº	DESCRIPTION DESCRIPCION	6KN4	6LB4	6KP4	6LC4		REMARKS OBSERVACIONES
1	6KN–12576–00	HOSE 1 MANGUERA 1	1	1	1	1		
2	6KN–12579–00	HOSE 4 MANGUERA 4	1	1	1	1		
3	6GR–42541–00	PIPE 1 TUBO 1	1	1	1	1		
4	90467–150A5	CLIP PRESILLA	1	1	1	1		
5	6GR–24376–00	PIPE, JOINT 1 TUBO DE UNION 1	3	3	3	3		
6	6KN–12551–00	HOSE 7 55 PLACA	1	1	1	1		
7	90445–09M00	HOSE (L180) TUBO (L180)	1	1	1	1		
8	6GR–1243A–00	HOSE 1 TUBO 1	1	1	1	1		
9	6GR–1243E–00	HOSE 2 TUBO 2	1	1	1	1		
10	90465–11M10	CLAMP BRIDA	14	14	14	14		
11	90465–11M59	CLAMP BRIDA	6	6	6	6		
12	6GR–12594–00	JOINT, HOSE 4 JUNTA DE MANGUERA 4	1	1	1	1		
13	6GR–1244H–00	HOSE 5 TUBO 5	1	1	1	1		
14	90445–09304	HOSE (L310) TUBO (L310)	1	1	1	1		
15	90465–13M24	CLAMP BRIDA	1	1	1	1		
16	6KN–12588–00	HOSE 5 MANGUERA 5	1	1	1	1		
17	6KN–12589–00	HOSE 6 MANGUERA 6	1	1	1	1		

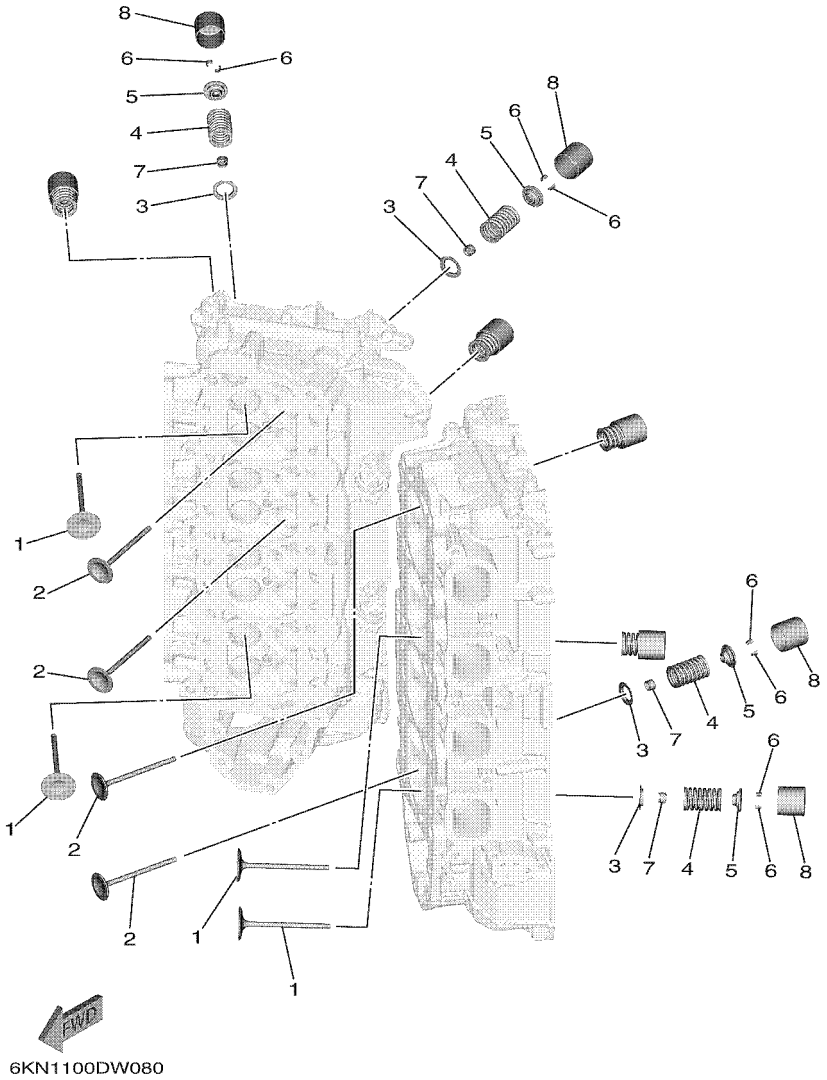

FIG. 8 VALVE 1 — VALVULA 1

REF. NO.	PART NO. CODIGO Nº	DESCRIPTION DESCRIPCION	6KN4	6LB4	6KP4	6LC4		REMARKS OBSERVACIONES
1	6GR–12111–00	VALVE, INTAKE VALVULA DE ADMISION	16	16	16	16		
2	6KN–12121–00	VALVE, EXHAUST VALVULA DE ESCAPE	16	16	16	16		
3	K0F–A3743–00	SEAT, VALVE SPRING ASIENTO RESORTE DE VALVULA	32	32	32	32		
4	6CB–12113–00	SPRING, VALVE INNER RESORTE VALVULA INTERNA	32	32	32	32		
5	K0F–A3741–00	RETAINER, VALVE SPRING RETEN RESORTE DE VALVULA	32	32	32	32		
6	K0F–A3742–00	LOCK, VALVE SPRING RETAINER SEGURO DE VALVULA	64	64	64	64		
7	51Y–12119–00	SEAL, VALVE STEM SELLO DE ACEITE VALVULA	32	32	32	32		
8	6GR–12153–00	LIFTER, VALVE (3.000) LEVANTADOR DE VALVULA (3.000)	32	32	32	32		UR UR
	6GR–12153–10	LIFTER, VALVE (3.025) LEVANTADOR DE VALVULA (3.025)	32	32	32	32		UR UR
	6GR–12153–20	LIFTER, VALVE (3.050) LEVANTADOR DE VALVULA (3.050)	32	32	32	32		UR UR
	6GR–12153–30	LIFTER, VALVE (3.075) LEVANTADOR DE VALVULA (3.075)	32	32	32	32		UR UR
	6GR–12153–40	LIFTER, VALVE (3.100) LEVANTADOR DE VALVULA (3.100)	32	32	32	32		UR UR
	6GR–12153–50	LIFTER, VALVE (3.120) LEVANTADOR DE VALVULA (3.120)	32	32	32	32		UR UR
	6GR–12153–60	LIFTER, VALVE (3.140) LEVANTADOR DE VALVULA (3.140)	32	32	32	32		UR UR
	6GR–12153–70	LIFTER, VALVE (3.160) LEVANTADOR DE VALVULA (3.160)	32	32	32	32		UR UR
	6GR–12153–80	LIFTER, VALVE (3.180) LEVANTADOR DE VALVULA (3.180)	32	32	32	32		UR UR
	6GR–12153–90	LIFTER, VALVE (3.200) LEVANTADOR DE VALVULA (3.200)	32	32	32	32		UR UR
	6GR–12153–A0	LIFTER, VALVE (3.220) LEVANTADOR DE VALVULA (3.220)	32	32	32	32		UR UR
	6GR–12153–B0	LIFTER, VALVE (3.240) LEVANTADOR DE VALVULA (3.240)	32	32	32	32		UR UR
	6GR–12153–C0	LIFTER, VALVE (3.260) LEVANTADOR DE VALVULA (3.260)	32	32	32	32		UR UR
	6GR–12153–D0	LIFTER, VALVE (3.280) LEVANTADOR DE VALVULA (3.280)	32	32	32	32		UR UR
	6GR–12153–E0	LIFTER, VALVE (3.300) LEVANTADOR DE VALVULA (3.300)	32	32	32	32		UR UR
	6GR–12153–F0	LIFTER, VALVE (3.320) LEVANTADOR DE VALVULA (3.320)	32	32	32	32		UR UR
	6GR–12153–G0	LIFTER, VALVE (3.340) LEVANTADOR DE VALVULA (3.340)	32	32	32	32		UR UR
	6GR–12153–H0	LIFTER, VALVE (3.360) LEVANTADOR DE VALVULA (3.360)	32	32	32	32		UR UR
	6GR–12153–J0	LIFTER, VALVE (3.380) LEVANTADOR DE VALVULA (3.380)	32	32	32	32		UR UR
	6GR–12153–K0	LIFTER, VALVE (3.400) LEVANTADOR DE VALVULA (3.400)	32	32	32	32		UR UR

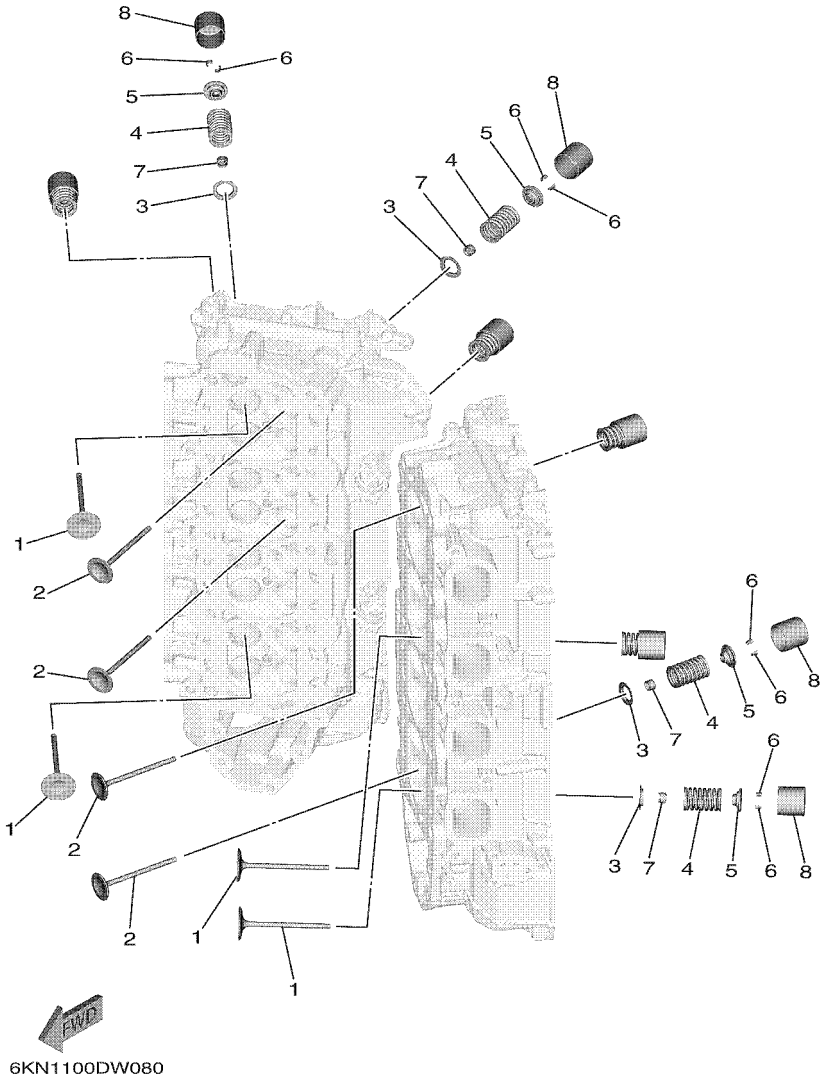

6KN1100DW080

FIG. 8 VALVE 1 — VALVULA 1

REF. NO.	PART NO. CODIGO Nº	DESCRIPTION DESCRIPCION	6KN4	6LB4	6KP4	6LC4		REMARKS OBSERVACIONES
8	6GR–12153–L0	LIFTER, VALVE (3.420) LEVANTADOR DE VALVULA (3.420)	32	32	32	32		UR UR
	6GR–12153–M0	LIFTER, VALVE (3.440) LEVANTADOR DE VALVULA (3.440)	32	32	32	32		UR UR
	6GR–12153–N0	LIFTER, VALVE (3.460) LEVANTADOR DE VALVULA (3.460)	32	32	32	32		UR UR
	6GR–12153–P0	LIFTER, VALVE (3.480) LEVANTADOR DE VALVULA (3.480)	32	32	32	32		UR UR
	6GR–12153–R0	LIFTER, VALVE (3.500) LEVANTADOR DE VALVULA (3.500)	32	32	32	32		UR UR
	6GR–12153–S0	LIFTER, VALVE (3.520) LEVANTADOR DE VALVULA (3.520)	32	32	32	32		UR UR
	6GR–12153–T0	LIFTER, VALVE (3.540) LEVANTADOR DE VALVULA (3.540)	32	32	32	32		UR UR
	6GR–12145–00	LIFTER, VALVE (3.560) LEVANTADOR DE VALVULA (3.560)	32	32	32	32		UR UR
	6GR–12145–10	LIFTER, VALVE (3.580) LEVANTADOR DE VALVULA (3.580)	32	32	32	32		UR UR
	6GR–12145–20	LIFTER, VALVE (3.600) LEVANTADOR DE VALVULA (3.600)	32	32	32	32		UR UR
	6GR–12145–30	LIFTER, VALVE (3.625) LEVANTADOR DE VALVULA (3.625)	32	32	32	32		UR UR
	6GR–12145–40	LIFTER, VALVE (3.650) LEVANTADOR DE VALVULA (3.650)	32	32	32	32		UR UR
	6GR–12145–50	LIFTER, VALVE (3.675) LEVANTADOR DE VALVULA (3.675)	32	32	32	32		UR UR
	6GR–12145–60	LIFTER, VALVE (3.700) LEVANTADOR DE VALVULA (3.700)	32	32	32	32		UR UR

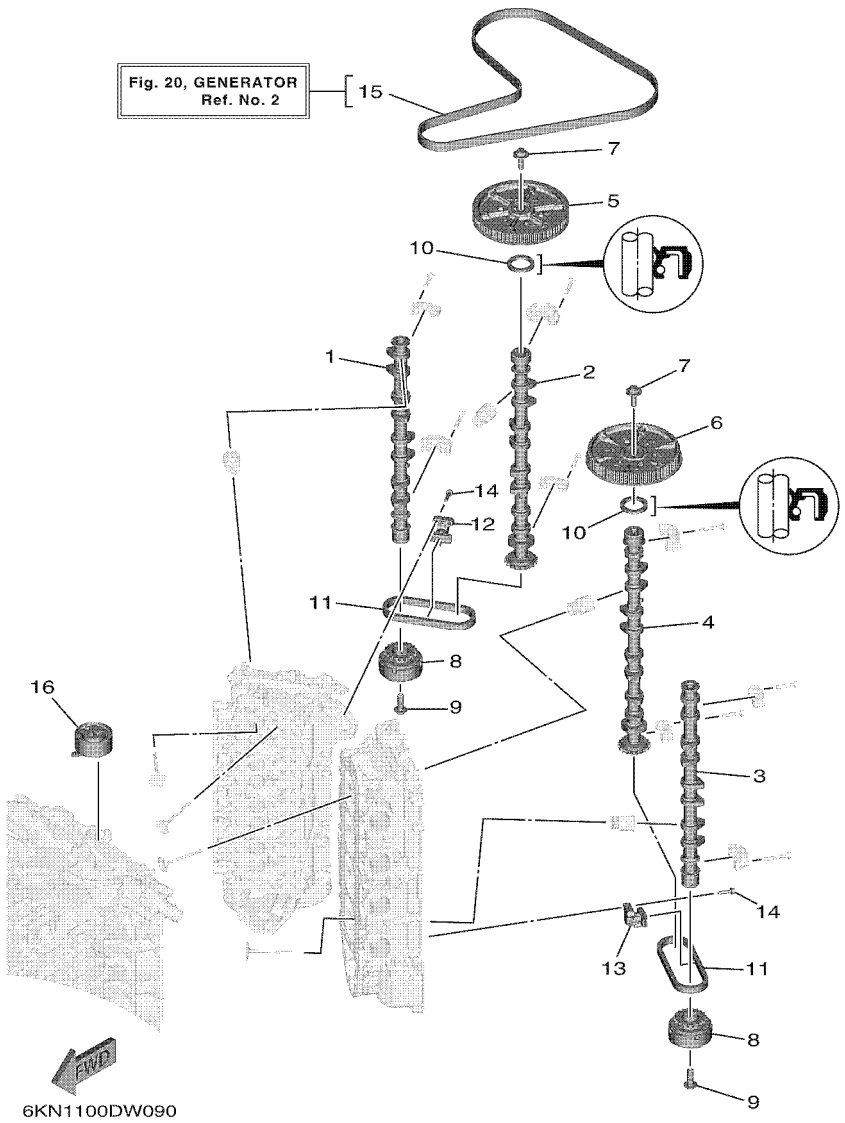

FIG. 9 VALVE 2 — VALVULA 2

REF. NO.	PART NO. CODIGO Nº	DESCRIPTION DESCRIPCION	6KN4	6LB4	6KP4	6LC4		REMARKS OBSERVACIONES
1	6KN–12171–00	CAMSHAFT 1 ARBOL DE LEVAS 1	1	1	1	1		
2	6KN–12181–00	CAMSHAFT 2 ARBOL DE LEVAS 2	1	1	1	1		
3	6KN–12172–00	CAMSHAFT 3 ARBOL DE LEVAS 3	1	1	1	1		
4	6KN–12182–00	CAMSHAFT 4 ARBOL DE LEVAS 4	1	1	1	1		
5	6GR–115A0–00	DRIVEN GEAR ASSY ENGRANAJE TRACCION COMPL.	1	1	1	1		
6	6GR–11567–00	GEAR, DRIVEN 2 ENGRANAJE TRACCION 2	1	1	1	1		
7	90119–10050	BOLT, WITH WASHER TORNILLO CON ARANDELA	2	2	2	2		
8	6GR–12645–00	PULLEY ASSY 1 POLEA COMPL. 1	2	2	2	2		
9	90401–12002	BOLT, UNION PERNO DE UNION	2	2	2	2		
10	93102–38008	OIL SEAL SELLO ACEITE	2	2	2	2		
11	94581–99044	CHAIN CADENA	2	2	2	2		
12	6GR–12210–00	TENSIONER ASSY, CAM CHAIN TENSOR CADENA DE LEVA	1	1	1	1		
13	6GR–12230–00	TENSIONER ASSY, CAM CHAIN 2 TENSOR CADENA DE LEVA 2	1	1	1	1		
14	90105–06037	BOLT, FLANGE TORNILLO	4	4	4	4		
15	6GR–W4624–00	BELT (WITH ROTOR BOLTS) CORREA (CON PERNO)	1	1	1	1		
16	6P2–11590–05	TENSIONER ASSY TENSOR COMPLET	1	1	1	1		

FIG. 10 INTAKE — ADMISION

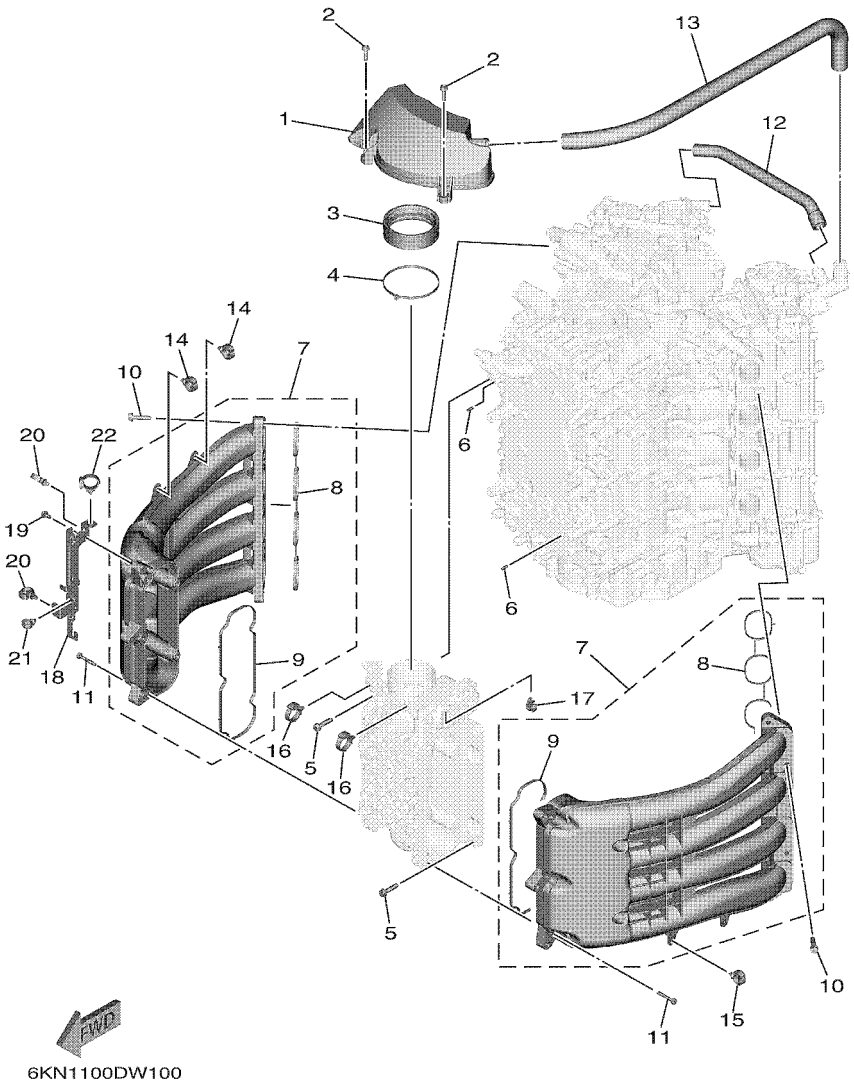

REF. NO.	PART NO. CODIGO Nº	DESCRIPTION DESCRIPCION	6KN4	6LB4	6KP4	6LC4		REMARKS OBSERVACIONES
1	6KN–14440–00	SILENCER ASSY, INTAKE SILENCIADOR COMPL DE ADMISION	1	1	1	1		
2	95D95–06025	BOLT, FLANGE DEEP RECESS CERROJO, REBORDE HUECO PROFUND	2	2	2	2		
3	6AW–1441J–01	PIPE, SILENCER TUBO	1	1	1	1		
4	90464–99004	CLAMP BRIDA	1	1	1	1		
5	90119–08022	BOLT, WITH WASHER TORNILLO CON ARANDELA	6	6	6	6		
6	91690–50014	PIN, SPRING PASADOR DE RESORTE	2	2	2	2		
7	6GR–13641–00	MANIFOLD, INTAKE 1 CONECTOR DE ADMISSION 1	2	2	2	2		
8	6GR–13645–00	.GASKET, MANIFOLD 1 .EMPAQUE	1	1	1	1		
9	6GR–13646–00	.GASKET, MANIFOLD 2 .EMPAQ. DE MULTIPLE 2	1	1	1	1		
10	90119–08022	BOLT, WITH WASHER TORNILLO CON ARANDELA	10	10	10	10		
11	90119–06MA6	BOLT, WITH WASHER TORNILLO CON ARANDELA	10	10	10	10		
12	6GR–1531A–00	HOSE, BREATHER 1 MANGUELA DE RESPIRADERO 1	1	1	1	1		
13	6KN–1531A–10	HOSE, BREATHER 1 MANGUELA DE RESPIRADERO 1	1	1	1	1		
14	90464–20181	CLAMP BRIDA	2	2	2	2		
15	90464–20181	CLAMP BRIDA	1	1	1	1		
16	90464–12183	CLAMP BRIDA	2	2	2	2		
17	90464–13249	CLAMP BRIDA	1	1	1	1		
18	6KN–8257G–00	CLAMP, CORD GRAMPA DE CORDON	1	1	1	1		
19	95D95–06012	BOLT, FLANGE DEEP RECESS CERROJO, REBORDE HUECO PROFUND	2	2	2	2		
20	90464–20181	CLAMP BRIDA	2	2	2	2		
21	90464–13249	CLAMP BRIDA	1	1	1	1		
22	90464–12183	CLAMP BRIDA	1	1	1	1		

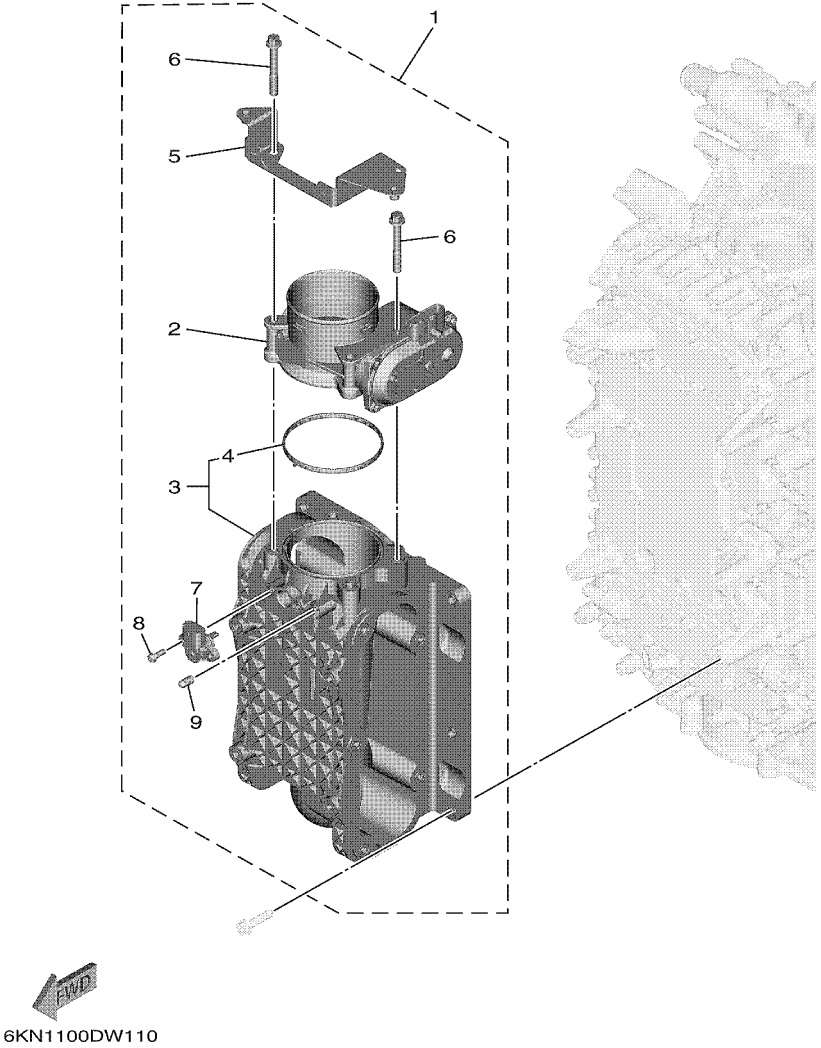

FIG. 11 THROTTLE BODY ASSY — CAJA DE ACELERADOR COMPL

REF. NO.	PART NO. CODIGO Nº	DESCRIPTION DESCRIPCION	6KN4	6LB4	6KP4	6LC4		REMARKS OBSERVACIONES
1	6KN–13750–01	THROTTLE BODY ASSY CAJA DE ACELERADOR COMPL.	1	1	1	1		
2	6GR–13751–01	.BODY, THROTTLE 1 .CAJA 1	1	1	1	1		
3	6GR–13711–00	.MIXING BODY .CUERPO DE MEZCLA	1	1	1	1		
4	6GR–13556–00	..GASKET, MANIFOLD ..EMPAQUE	1	1	1	1		
5	6KN–13898–00	.HOLDER .SOSTEN	1	1	1	1		
6	90105–08M36	.BOLT, FLANGE .TORNILLO	4	4	4	4		
7	68F–83688–10	.SENSOR ASSY .SENSOR COMP.	1	1	1	1		
8	68V–81147–00	.SCREW 3 .TORNILLO 3	2	2	2	2		
9	63P–13643–00	.COVER, MANIFOLD .CUBIERTA DE COLECTOR	1	1	1	1		

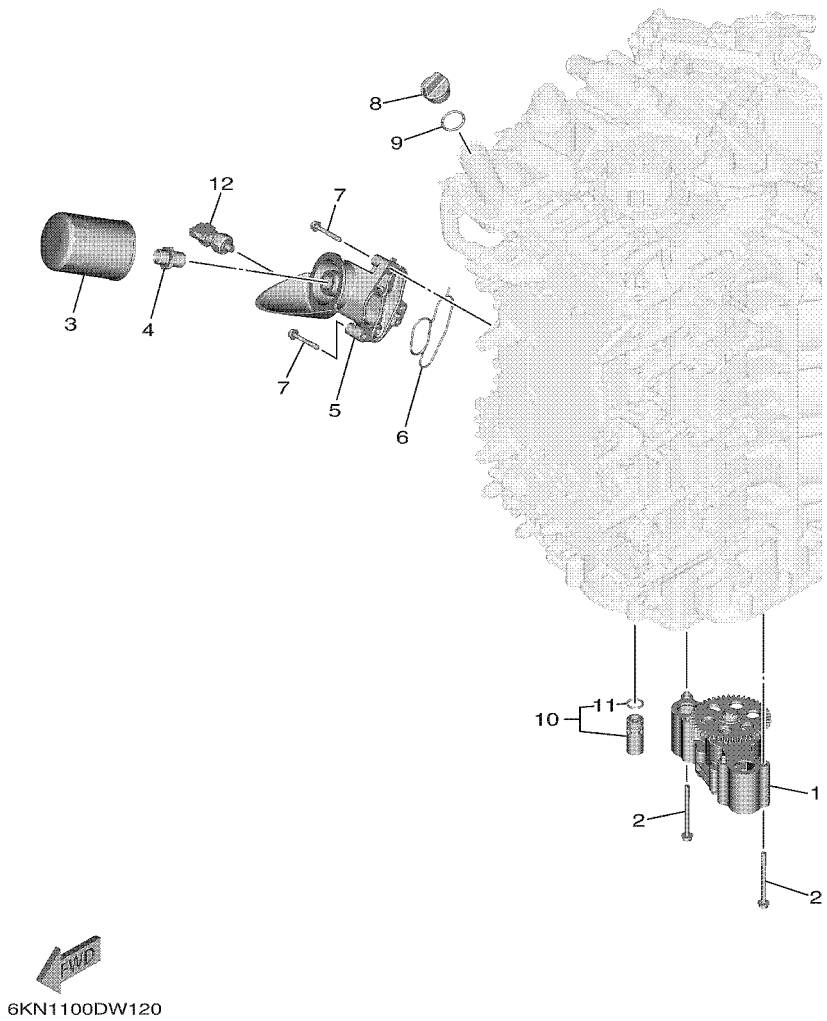

FIG. 12 OIL PUMP — BOMBA DE ACEITE

REF. NO.	PART NO. CODIGO Nº	DESCRIPTION DESCRIPCION	6KN4	6LB4	6KP4	6LC4		REMARKS OBSERVACIONES
1	6GR–13300–01	OIL PUMP ASSY BOMBA DE ACEITE COMPLETA	1	1	1	1		
2	95817–06075	BOLT, FLANGE TORNILLO	4	4	4	4		
3	N26–13440–04	ELEMENT ASSY, OIL CLEANER ELEMENTO FILTRO DE ACEITE	1	1	1	1		
4	90401–19001	BOLT, UNION PERNO DE UNION	1	1	1	1		
5	6GR–13446–00	CONNECTOR CONECTOR	1	1	1	1		
6	6GR–13477–00	GASKET EMPAQUE	1	1	1	1		
7	90105–06151	BOLT, FLANGE TORNILLO	3	3	3	3		
8	6G8–15363–00	PLUG, OIL TAPON DE ACEITE	1	1	1	1		
9	93210–24M79	O-RING ANILLO O	1	1	1	1		
10	6GR–13490–00	RELIEF VALVE ASSY VALVELA DE DESCOMPRESION	1	1	1	1		
11	6GR–13473–00	.O-RING .ANILLO O	1	1	1	1		
12	6AW–83651–01	SENDER, OIL PRESSURE TRASMISOR DE PRESION DE ACEITE	1	1	1	1		

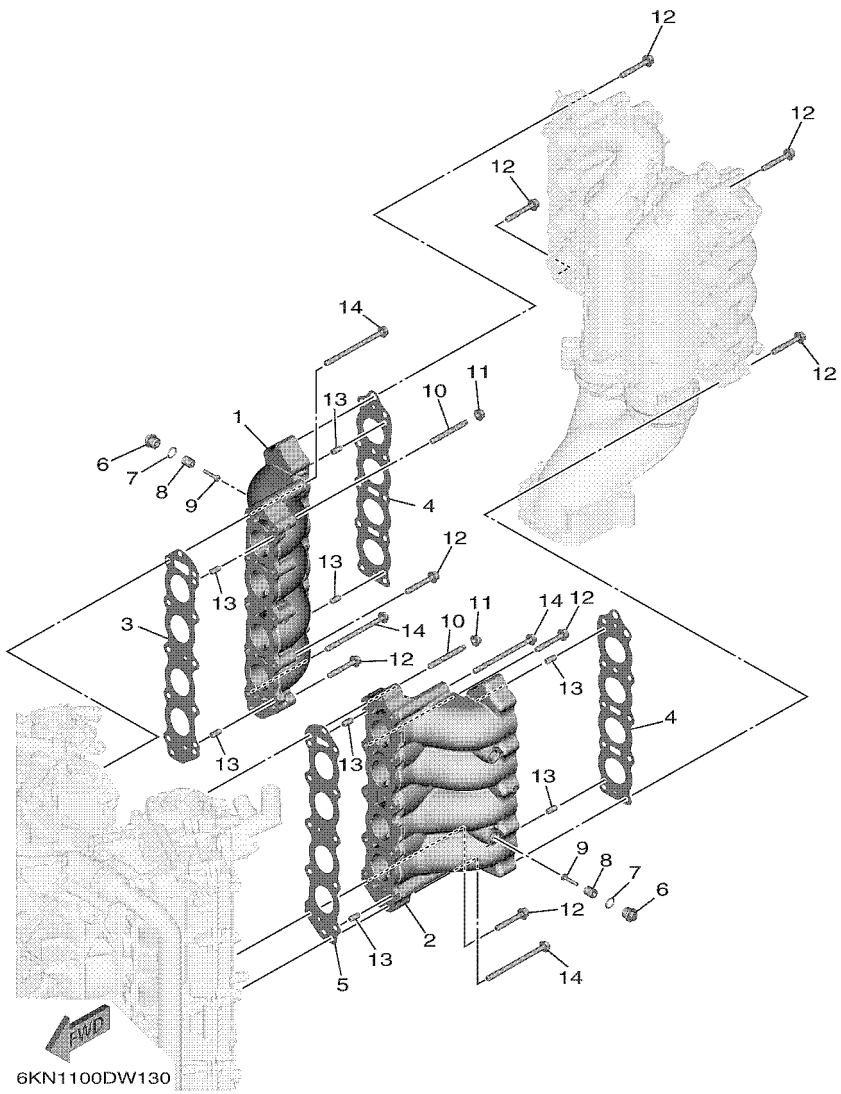

FIG. 13 EXHAUST 1 — DESCARGA 1

REF. NO.	PART NO. CODIGO Nº	DESCRIPTION DESCRIPCION	6KN4	6LB4	6KP4	6LC4		REMARKS OBSERVACIONES
1	6KN–14615–00–9S	JOINT, EXHAUST 1 EMPAQUE DE ESCAPE 1	1	1	1	1		
2	6KN–14625–00–9S	JOINT, EXHAUST 2 EMPAQUE DE ESCAPE 2	1	1	1	1		
3	6KN–14613–00	GASKET, EXHAUST PIPE JUNTA, TUBO DE ESCAPE	1	1	1	1		
4	6KN–14623–00	GASKET, EXHAUST PIPE EMPAQUE	2	2	2	2		
5	6KN–14643–00	GASKET 3 JUNTA BRIDA DE ESCAPE	1	1	1	1		
6	6G8–11197–A0	PLUG, BLIND TAPON, CIEGO	4	4	4	4		
7	93210–13M63	O-RING ANILLO O	4	4	4	4		
8	6G8–11325–00	ANODE ANODO	4	4	4	4		
9	98980–05025	SCREW, BIND TORNILLO DE LIGAR	4	4	4	4		
10	90116–08037	BOLT, STUD ESPARRAGO	4	4	4	4		
11	90179–08M34	NUT TUERCA	4	4	4	4		
12	90105–08175	BOLT, FLANGE TORNILLO	22	22	22	22		
13	93608–16M16	PIN, DOWEL PASADOR DE CLAVIJA	8	8	8	8		
14	90105–08279	BOLT, FLANGE TORNILLO	10	10	10	10		

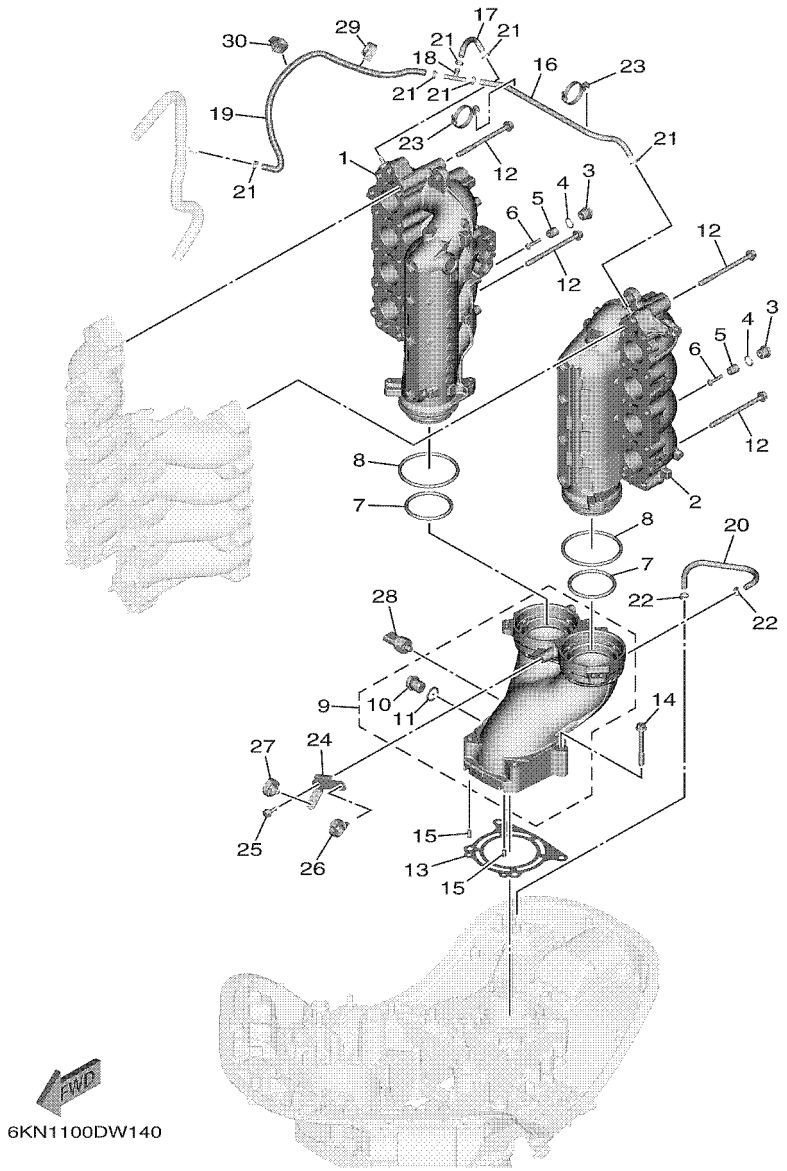

FIG. 14 EXHAUST 2 — DESCARGA 2

REF. NO.	PART NO. CODIGO Nº	DESCRIPTION DESCRIPCION	6KN4	6LB4	6KP4	6LC4		REMARKS OBSERVACIONES
1	6KN–14635–10–9S	JOINT, EXHAUST 3 UNION DE ESCAPE 3	1	1	1	1		
2	6KN–14645–10–9S	JOINT, EXHAUST 4 UNION DE ESCAPE	1	1	1	1		
3	6G8–11197–B0	PLUG, BLIND TAPON, CIEGO	2	2	2	2		
4	93210–13M63	O-RING ANILLO O	2	2	2	2		
5	6G8–11325–00	ANODE ANODO	2	2	2	2		
6	98980–05025	SCREW, BIND TORNILLO DE LIGAR	2	2	2	2		
7	93210–65001	O-RING ANILLO O	2	2	2	2		
8	93210–85003	O-RING ANILLO O	2	2	2	2		
9	6KN–14656–00–9S	JOINT, EXHAUST 5 UNION DE ESCAPE 5	1	1	1	1		
10	90340–18M09	.PLUG, STRAIGHT SCREW .TORNILLO, DE DRENAJE	1	1	1	1		
11	90201–186F1	.WASHER, PLATE .ARANDELA PLANA	1	1	1	1		
12	90105–08277	BOLT, FLANGE TORNILLO	10	10	10	10		
13	6GR–41134–00	GASKET, EXHAUST MANIFOLD EMPAQUE	1	1	1	1		
14	90105–08220	BOLT, FLANGE TORNILLO	4	4	4	4		
15	93606–12019	PIN, DOWEL PASADOR DE CLAVIJA	2	2	2	2		
16	90445–09104	HOSE (L300) TUBO (L300)	1	1	1	1		
17	90445–09063	HOSE (L80) TUBO (L80)	1	1	1	1		
18	688–24378–00	PIPE, JOINT 3 TUBO DE UNION 3	1	1	1	1		
19	6KN–12481–00	PIPE 1 TUBO 1	1	1	1	1		
20	90445–09095	HOSE (L215) TUBO (L215)	1	1	1	1		
21	90465–11M10	CLAMP BRIDA	6	6	6	6		
22	90465–11M10	CLAMP BRIDA	2	2	2	2		
23	90464–09028	CLAMP BRIDA	2	2	2	2		
24	6KN–82588–00	PLATE PLACA	1	1	1	1		
25	95D95–06016	BOLT, FLANGE DEEP RECESS CERROJO, REBORDE HUECO PROFUND	1	1	1	1		
26	90464–20181	CLAMP BRIDA	1	1	1	1		
27	90464–20181	CLAMP BRIDA	1	1	1	1		

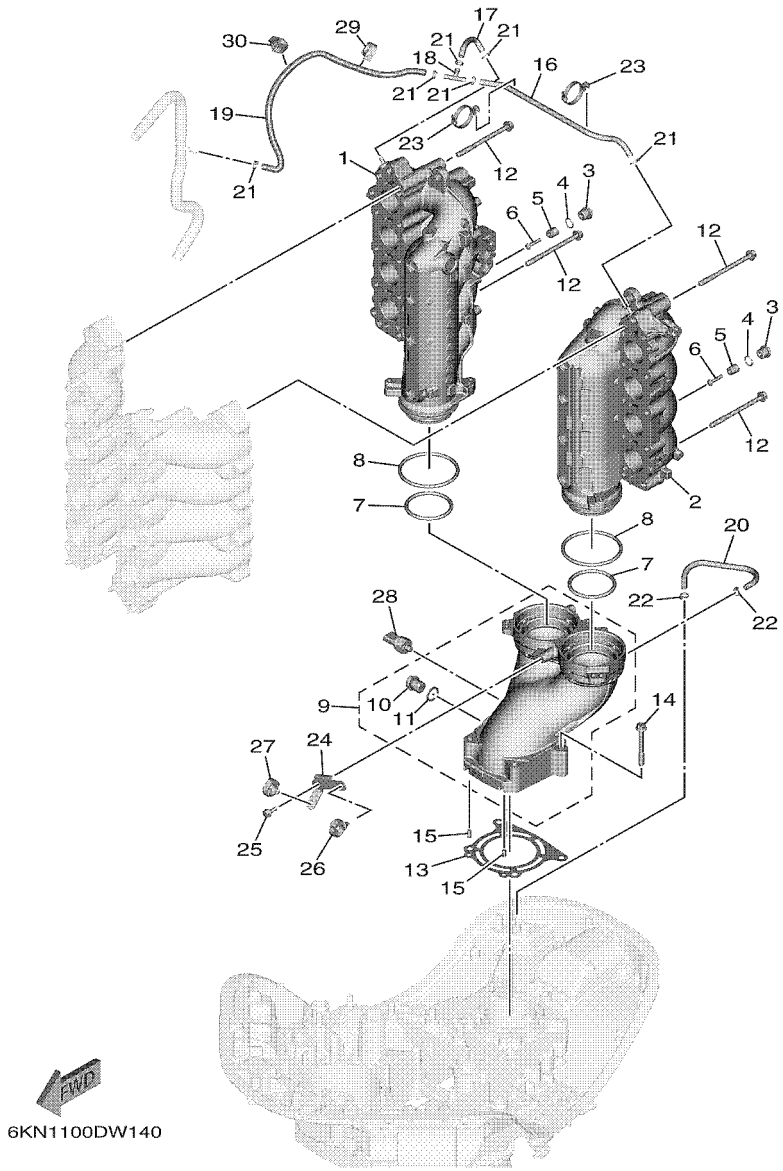

FIG. 14 EXHAUST 2 — DESCARGA 2

REF. NO.	PART NO. CODIGO Nº	DESCRIPTION DESCRIPCION	6KN4	6LB4	6KP4	6LC4		REMARKS OBSERVACIONES
28	6GR–8366B–00	SENSOR, WATER PRESSURE SENSOR DE PRESION AGUA	1	1	1	1		
29	90464–18004	CLAMP BRIDA	1	1	1	1		
30	90464–18004	CLAMP BRIDA	1	1	1	1		

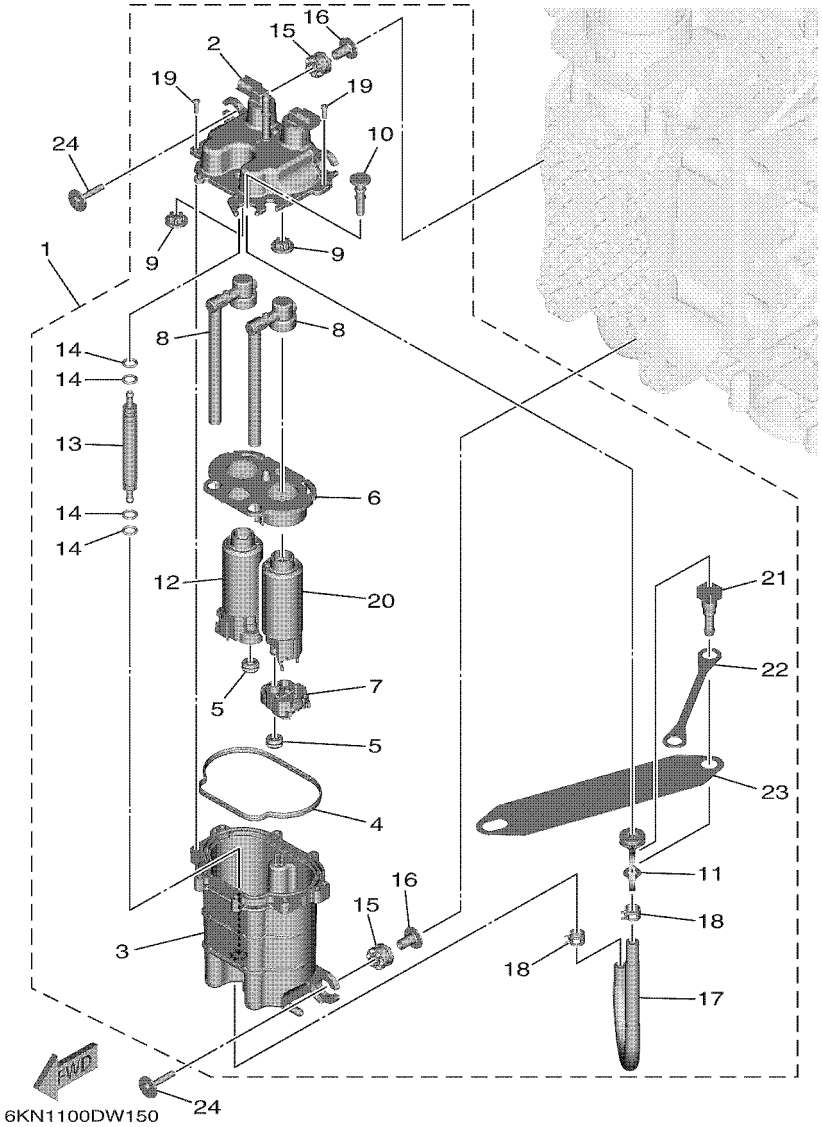

FIG. 15 VAPOR SEPARATOR — SEPARADOR DE VAPOR

REF. NO.	PART NO. CODIGO Nº	DESCRIPTION DESCRIPCION	6KN4	6LB4	6KP4	6LC4		REMARKS OBSERVACIONES
1	6GR–24220–03	FUEL TANK COMP. 2 DEPOSITO DE COMBUSTIBLE COMP.2	1	1	1	1		EXCEPT FOR BRA EXCEPT FOR BRA
	6GR–24220–12	FUEL TANK COMP. 2 DEPOSITO DE COMBUSTIBLE COMP.2	1		1			FOR BRA FOR BRA
2	6GR–24223–00	.COVER, FUEL TANK ASSY .CUBIERTA DEL TANQUE DE COMBUST	1	1	1	1		
3	6GR–24224–01	.CASE, FUEL TANK ASSY. .CASO, TANQUE DE COMBUSTIBLE	1	1	1	1		
4	6GR–24218–00	.GASKET .EMPAQUETADURA	1	1	1	1		
5	6GR–13781–00	.DAMPER, PUMP .AMORTIGUADOR DE BOMBA	2	2	2	2		
6	6GR–2441R–00	.PLATE, BAFFLE 1 .PLACA DEFLECTORA 1	1	1	1	1		
7	6GR–244A1–00	.CASE, PUMP 1 .CAJA DE BOMBA 1	1	1	1	1		
8	6GR–13938–00	.PIPE .TUBO DE ADMISION	2	2	2	2		
9	6GR–13593–00	.DAMPER .COJINETE DE RODILLOS	2	2	2	2		
10	6GR–24196–00	.PLUG, DRAIN .TAPON DE DRENAJE	1	1	1	1		
11	6GR–2419A–00	.HOLDER .SOSTEN	1	1	1	1		
12	6GR–24430–00	.FUEL PUMP ASSY .BOMBA DE COMBUSTIBLE COMPL	1	1	1	1		
13	6GR–21841–00	.COOLER .ENFRIADOR	1	1	1	1		
14	6FM–14562–00	.O-RING .ANILLO O	4	4	4	4		
15	6CB–13593–00	.DAMPER .COJINETE DE RODILLOS	4	4	4	4		
16	6GR–13716–00	.COLLAR .COLLAR	4	4	4	4		
17	6GR–14197–00	.PIPE .TUBO RESPIRADERO	1	1	1	1		
18	68V–13577–01	.CLIP .PRESILLA	2	2	2	2		
19	6GR–14567–00	.SCREW .TORNILLO	8	8	8	8		
20	6GR–24420–10	.FUEL PUMP ASSY .BOMBA DE COMBUSTIBLE COMPL	1	1	1	1		
21	6AW–24300–11	.FUEL PIPE JOINT .CONECTOR MANGUERA COMBUSTIBLE	1	1	1	1		
22	6GR–24113–00	.PLATE, CONNECTING .PLACA DE CONEXION	1	1	1	1		
23	6GR–2415H–00	.LABEL, WARNING .ETIQUETA DE ADVERTENCIA	1	1	1	1		FOR 6GR-24220-03 FOR 6GR-24220-03
	6GR–2415H–10	.LABEL, WARNING .ETIQUETA DE ADVERTENCIA	1		1			FOR 6GR-24220-12 FOR 6GR-24220-12
24	90119–06299	BOLT, WITH WASHER TORNILLO CON ARANDELA	4	4	4	4		

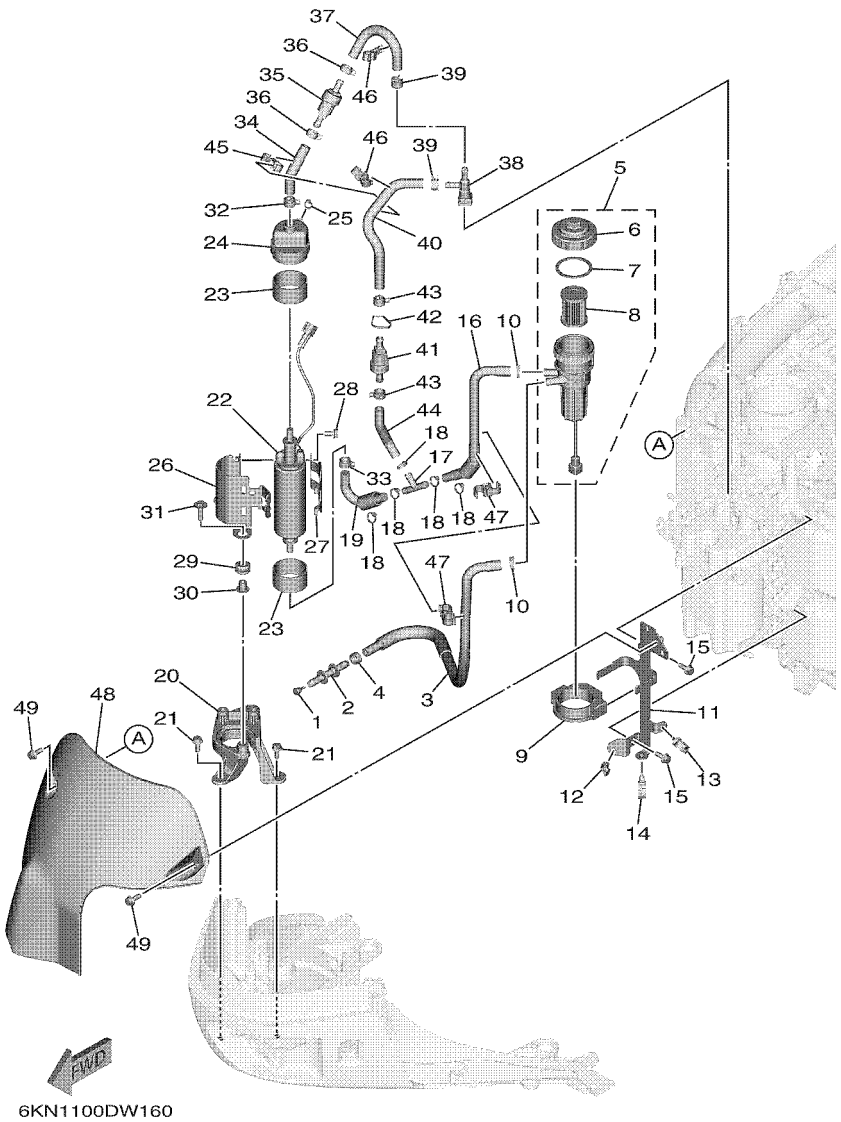

FIG. 16 FUEL 1 — COMBUSTIBLE 1

REF. NO.	PART NO. CODIGO Nº	DESCRIPTION DESCRIPCION	6KN4	6LB4	6KP4	6LC4		REMARKS OBSERVACIONES
1	689–85547–01	DAMPER AMORTIGUADOR	1	1	1	1		
2	6AW–24377–01	PIPE, JOINT 2 TUBO DE UNION 2	1	1	1	1		
3	6GR–24311–00	PIPE, FUEL 1 TUBO DE COMBUSTIBLE 1	1	1	1	1		
4	6E5–24351–51	BAND 1 ABRAZADERA 1	1	1	1	1		
5	6GR–24560–01	FILTER ASSY FILTRO COMPLETO	1	1	1	1		
6	6GR–24561–00	.BODY,FILTER .RED DE FILTRO	1	1	1	1		
7	6P3–24564–00	.GASKET .EMPAQUE	1	1	1	1		
8	6P3–24563–02	.ELEMENT, FILTER .ELEMENTO DEL FILTRO	1	1	1	1		
9	6GR–24568–01	BAND, FILTER BANDA DE FILTO	1	1	1	1		
10	90465–11M10	CLAMP BRIDA	2	2	2	2		
11	6GR–24566–00	BRACKET, FILTER SOPORTE DEL FILTRO	1	1	1	1		
12	90464–11121	CLAMP BRIDA	1	1	1	1		
13	90464–13249	CLAMP BRIDA	1	1	1	1		
14	90464–18246	CLAMP BRIDA	1	1	1	1		
15	95D95–06016	BOLT, FLANGE DEEP RECESS CERROJO, REBORDE HUECO PROFUND	2	2	2	2		
16	6GR–24312–01	PIPE 2 TUBO 2	1	1	1	1		
17	6E5–24378–00	PIPE, JOINT 3 TUBO DE UNION 3	1	1	1	1		
18	90465–11M10	CLAMP BRIDA	5	5	5	5		
19	6GR–24321–01	PIPE 10 TUBO 10	1	1	1	1		
20	6GR–24425–00	BRACKET, FUEL PUMP 1 SOPORTE BOMBA COMBUSTIBLE 1	1	1	1	1		
21	95D95–06016	BOLT, FLANGE DEEP RECESS CERROJO, REBORDE HUECO PROFUND	3	3	3	3		
22	6GR–24410–02	FUEL PUMP ASSY BOMBA DE COMBUSTIBLE COMPLETA	1	1	1	1		
23	6DA–24492–01	BUSH, FUEL PUMP BUJE	2	2	2	2		
24	6GR–24462–01	CAP, BLIND TAPA CIEGA	1	1	1	1		
25	90465–11M10	CLAMP BRIDA	1	1	1	1		
26	6GR–24491–00	BRACKET, FUEL PUMP SOPORTE BOMBA COMBUSTIBLE	1	1	1	1		
27	6GR–24426–00	BRACKET, FUEL PUMP 2 SOPORTE BOMBA COMBUSTIBLE 2	1	1	1	1		

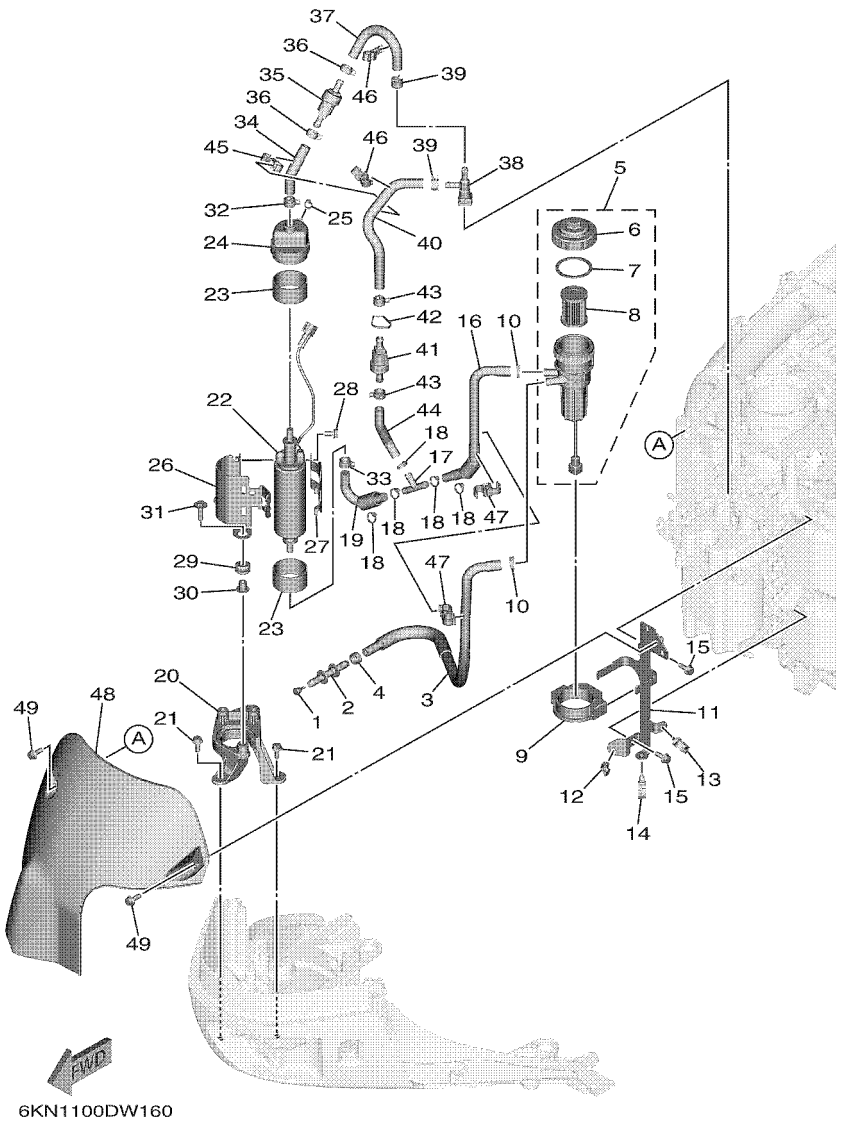

FIG. 16 FUEL 1 — COMBUSTIBLE 1

REF. NO.	PART NO. CODIGO Nº	DESCRIPTION DESCRIPCION	6KN4	6LB4	6KP4	6LC4		REMARKS OBSERVACIONES
28	95D95–06012	BOLT, FLANGE DEEP RECESS CERROJO, REBORDE HUECO PROFUND	2	2	2	2		
29	90480–10M23	GROMMET TAPON	3	3	3	3		
30	90387–06289	COLLAR ESPACIADOR	3	3	3	3		
31	90119–06309	BOLT, WITH WASHER TORNILLO CON ARANDELA	3	3	3	3		
32	90467–140A9	CLIP PRESILLA	1	1	1	1		
33	90467–141A2	CLIP PRESILLA	1	1	1	1		
34	6GR–24322–00	PIPE 11 TUBO 11	1	1	1	1		
35	6R5–24408–10	FUEL FEED ASSY ALIMENTADOR COMBUST. COMPL.	1	1	1	1		
36	90467–140A9	CLIP PRESILLA	2	2	2	2		
37	6GR–24323–00	PIPE 12 TUBO 12	1	1	1	1		
38	6P2–24300–01	FUEL PIPE JOINT CONECTOR MANGUERA COMBUSTIBLE	1	1	1	1		
39	90467–120A7	CLIP PRESILLA	2	2	2	2		
40	6GR–24324–00	PIPE 13 TUBO 13	1	1	1	1		
41	6GR–24460–20	RELIEF VALVE ASSY VALVELA DE DESCOMPRESION	1	1	1	1		
42	90465–13M60	CLAMP BRIDA	1	1	1	1		
43	90467–140A9	CLIP PRESILLA	2	2	2	2		
44	6GR–24325–01	PIPE 14 TUBO 14	1	1	1	1		
45	90464–12009	CLAMP BRIDA	1	1	1	1		
46	90464–12010	CLAMP BRIDA	2	2	2	2		
47	90464–12009	CLAMP BRIDA	2	2	2	2		
48	6GR–24596–01	COVER CUBIERTA	1	1	1	1		
49	95D95–06016	BOLT, FLANGE DEEP RECESS CERROJO, REBORDE HUECO PROFUND	3	3	3	3		

FIG. 17 FUEL 2 — COMBUSTIBLE 2

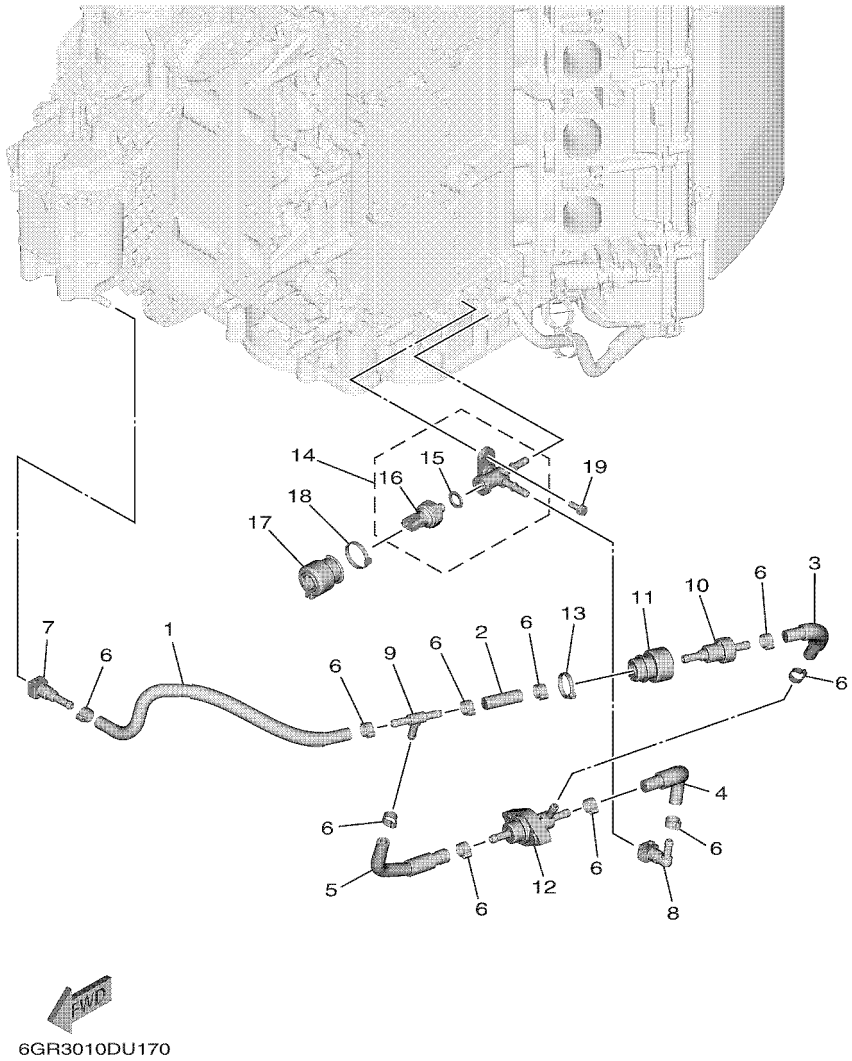

REF. NO.	PART NO. CODIGO Nº	DESCRIPTION DESCRIPCION	6KN4	6LB4	6KP4	6LC4		REMARKS OBSERVACIONES
1	6GR–24313–00	PIPE 3 TUBO 3	1	1	1	1		
2	6GR–24314–00	PIPE 4 TUBO 4	1	1	1	1		
3	6GR–24315–00	PIPE 5 TUBO DE DESAGUE	1	1	1	1		
4	6GR–24316–00	PIPE 6 TUBO 6	1	1	1	1		
5	6GR–24317–10	PIPE 7 TUBO 7	1	1	1	1		
6	90467–141A1	CLIP PRESILLA	10	10	10	10		
7	6AW–24300–11	FUEL PIPE JOINT CONECTOR MANGUERA COMBUSTIBLE	1	1	1	1		
8	6AW–24300–01	FUEL PIPE JOINT CONECTOR MANGUERA COMBUSTIBLE	1	1	1	1		
9	6CB–24461–00	PIPE, JOINT TUBO DE UNION	1	1	1	1		
10	6GR–24408–01	FUEL FEED ASSY ALIMENTADOR COMBUST. COMPL.	1	1	1	1		
11	6GR–24217–00	COVER CUBIERTA	1	1	1	1		
12	6GR–24460–01	RELIEF VALVE ASSY VALVELA DE DESCOMPRESION	1	1	1	1		
13	90465–13M97	CLAMP BRIDA	1	1	1	1		
14	6GR–8A411–00	SENSOR UNIT 1 SENSOR UNIDAD 1	1	1	1	1		
15	6GR–825A8–00	.SEAL, SENSOR .SELLO, SENSOR	1	1	1	1		
16	6GR–82421–00	.SENSOR, FUEL PRESSURE .SENSOR, PRESION COMBUSTIBLE	1	1	1	1		
17	6GR–2464E–01	COVER, CAP CUBIERTA DE TAPA	1	1	1	1		
18	90465–13M97	CLAMP BRIDA	1	1	1	1		
19	97E95–06516	BOLT, HEXAGON W/W DEEP RECESS TORNILLO HEXAGONAL CON RONDONA	1	1	1	1		

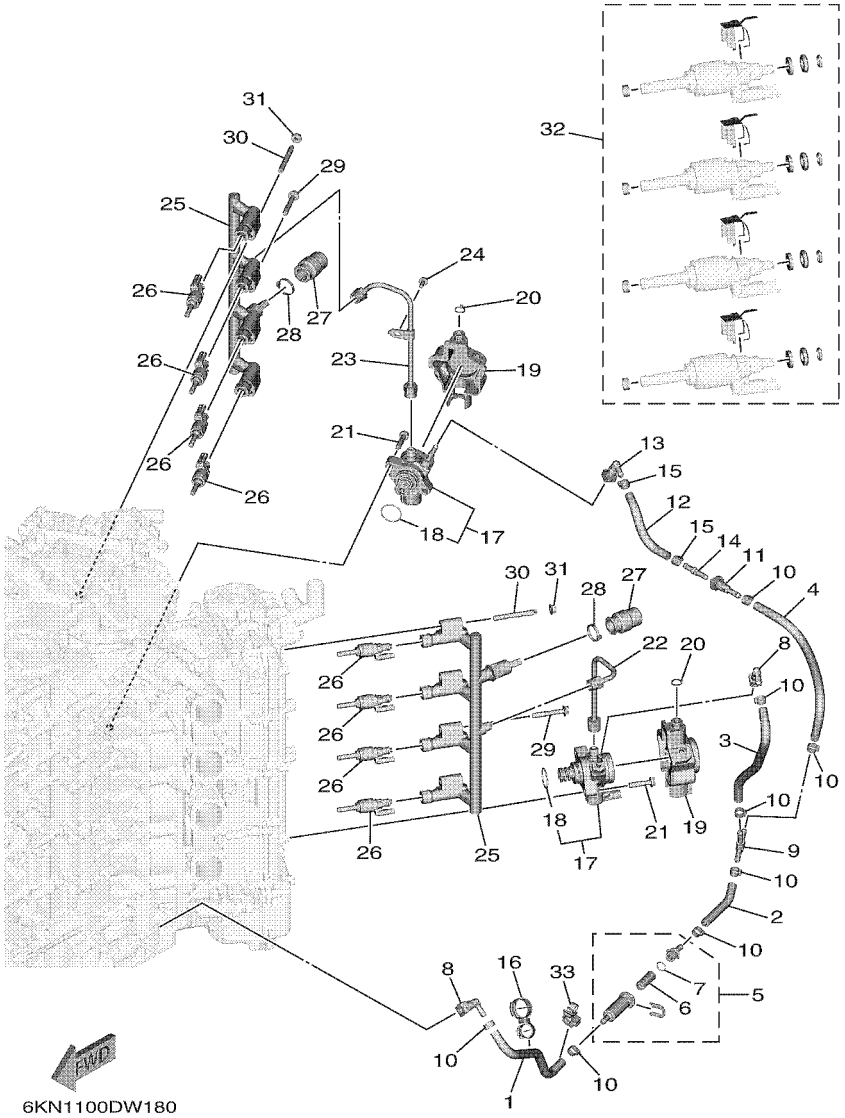

FIG. 18 FUEL 3 — COMBUSTIBLE 3

REF. NO.	PART NO. CODIGO Nº	DESCRIPTION DESCRIPCION	6KN4	6LB4	6KP4	6LC4		REMARKS OBSERVACIONES
1	6GR–243A1–00	PIPE 15 TUBO 15	1	1	1	1		
2	6GR–243A2–00	PIPE 16 TUBO 16	1	1	1	1		
3	6GR–243A3–00	PIPE 17 TUBO 17	1	1	1	1		
4	6KN–243A1–00	PIPE 15 TUBO 15	1	1	1	1		
5	6GR–24251–00	STRAINER 1 COLADOR 1	1	1	1	1		
6	6GR–24501–00	.FILTER, FUEL .FIELTRO	1	1	1	1		
7	6GR–13016–00	.O-RING .ANILLO O	1	1	1	1		
8	6AW–24300–01	FUEL PIPE JOINT CONECTOR MANGUERA COMBUSTIBLE	2	2	2	2		
9	6CB–24461–00	PIPE, JOINT TUBO DE UNION	1	1	1	1		
10	90467–141A1	CLIP PRESILLA	8	8	8	8		
11	6AW–24300–11	FUEL PIPE JOINT CONECTOR MANGUERA COMBUSTIBLE	1	1	1	1		
12	6KN–243A2–00	PIPE 16 TUBO 16	1	1	1	1		
13	6AW–24300–01	FUEL PIPE JOINT CONECTOR MANGUERA COMBUSTIBLE	1	1	1	1		
14	6KN–24461–00	PIPE, JOINT TUBO DE UNION	1	1	1	1		
15	90467–141A1	CLIP PRESILLA	2	2	2	2		
16	90464–29223	CLAMP BRIDA	1	1	1	1		
17	6GR–13910–00	FUEL PUMP ASSY BOMBA DE COMBUSTIBLE COMPLETA	2	2	2	2		
18	6GR–12439–00	.O-RING .ANILLO O	1	1	1	1		
19	6GR–24595–01	PROTECTOR PROTECTOR	2	2	2	2		
20	90465–11M10	CLAMP BRIDA	2	2	2	2		
21	97E95–08535	BOLT, HEXAGON W/W DEEP RECESS TORNILLO HEXAGONAL CON RONDONA	4	4	4	4		
22	6GR–14295–00	PIPE, FUEL TUBO DE COMBUSTIBLE	1	1	1	1		
23	6GR–14296–00	PIPE, FUEL 2 TUBO DE COMBUSTIBLE 2	1	1	1	1		
24	95D95–06014	BOLT, FLANGE DEEP RECESS CERROJO, REBORDE HUECO PROFUND	1	1	1	1		
25	6GR–13160–09	DELIVERY PIPE ASSY 1 TUBO DE LLEGADA CONJUNTO 1	2	2	2	2		
26	6GR–13761–00	INJECTOR INYECTOR	8	8	8	8		
27	6GR–24599–01	CAP SELLO TAPA	2	2	2	2		

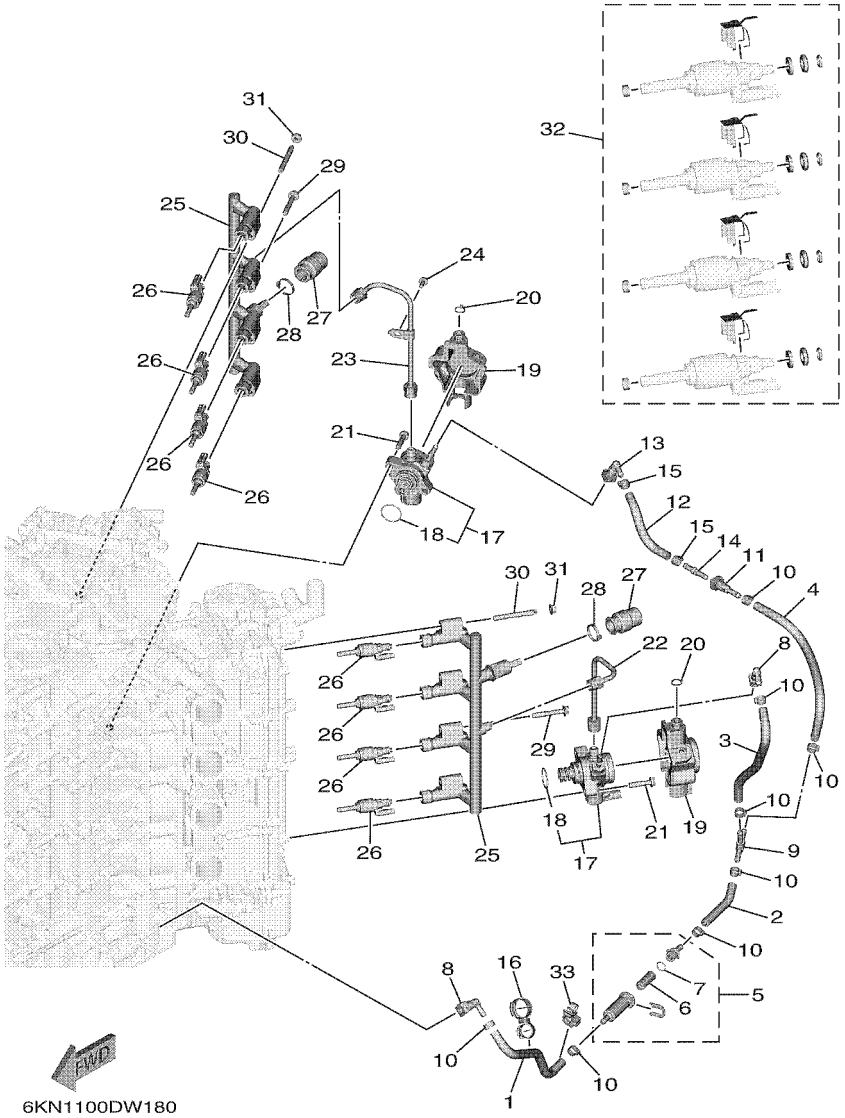

FIG. 18 FUEL 3 — COMBUSTIBLE 3

REF. NO.	PART NO. CODIGO Nº	DESCRIPTION DESCRIPCION	6KN4	6LB4	6KP4	6LC4		REMARKS OBSERVACIONES
28	90465–13M97	CLAMP BRIDA	2	2	2	2		
29	90105–08175	BOLT, FLANGE TORNILLO	4	4	4	4		
30	90116–08037	BOLT, STUD ESPARRAGO	4	4	4	4		
31	90179–08M34	NUT TUERCA	4	4	4	4		
32	6GR–W0005–00	O-RING SET JUEGO DE ANILLOS O	2	2	2	2		
33	90464–16015	CLAMP BRIDA	1	1	1	1		

FIG. 19 FUEL 4 — COMBUSTIBLE 4

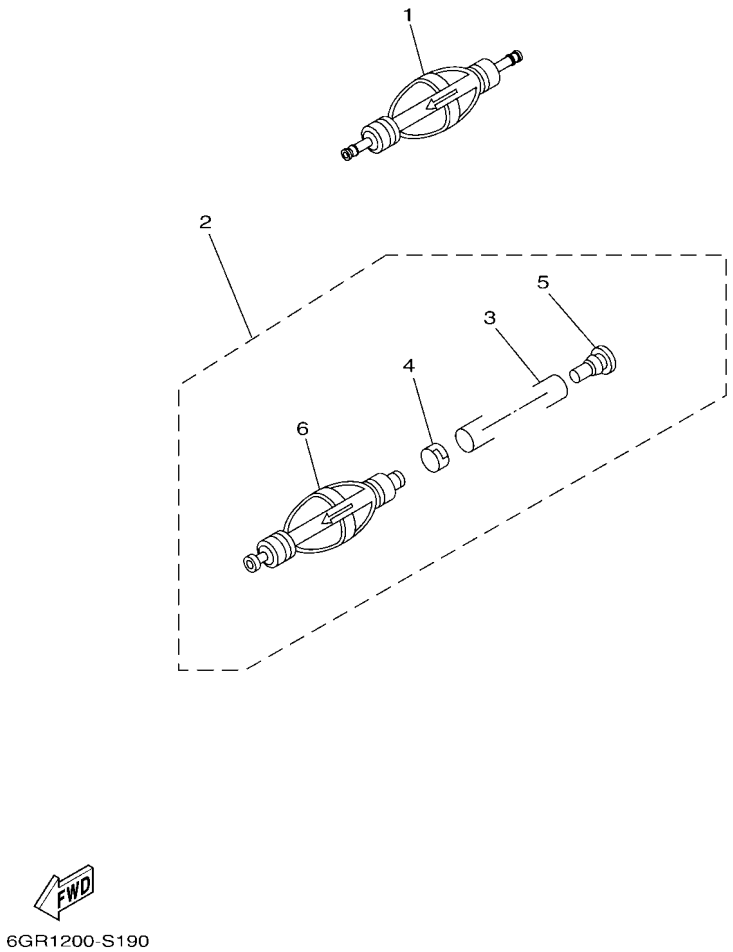

REF. NO.	PART NO. CODIGO Nº	DESCRIPTION DESCRIPCION	6KN4	6LB4	6KP4	6LC4		REMARKS OBSERVACIONES
1	6AW–24360–02	PRIMER PUMP ASSY SOPORTE BOMBA	1		1			AP FOR CAR AP FOR CAR
2	6Y2–24307–52	FUEL PIPE COMP. 2 MANGUERA COMPL,COMBUSTIBLE 2	1	1	1	1		AP EXCEPT FOR CAR AP EXCEPT FOR CAR
3	90445–13M25	.HOSE (L2050) .MANGUERA (L2050)	1	1	1	1		
4	6E5–24351–51	.BAND 1 .ABRAZADERA 1	1	1	1	1		
5	90480–06M19	.GROMMET .TAPON	1	1	1	1		
6	6Y2–24360–60	.PRIMER PUMP ASSY .SOPORTE BOMBA	1	1	1	1		

FIG. 20 GENERATOR GENERADOR

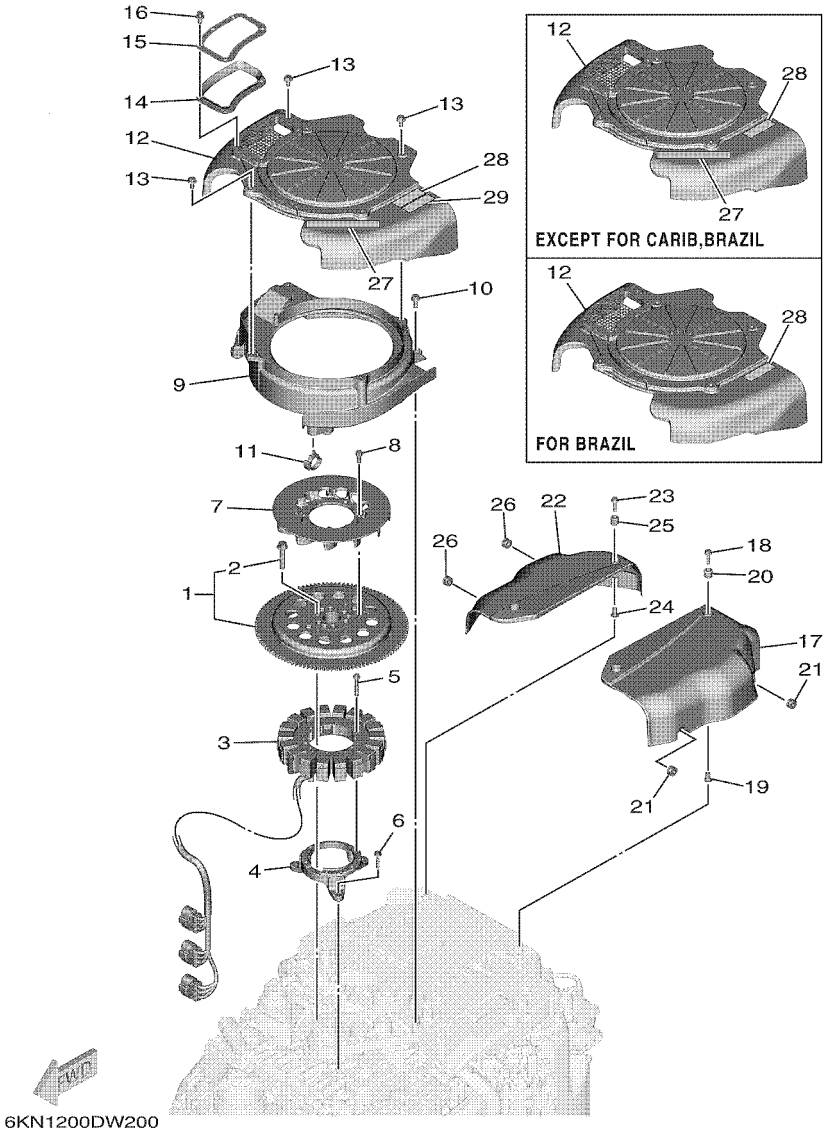

REF. NO.	PART NO. CODIGO Nº	DESCRIPTION DESCRIPCION	6KN4	6LB4	6KP4	6LC4		REMARKS OBSERVACIONES
1	6KN–W8145–00	ROTOR ASSY WITH BOLTS ROTOR COMPLETO CON TORNILLO	1	1	1	1		
2	6EK–W9010–00	.BOLT SET .JUEGO DE TORNILLO	1	1	1	1		
3	6GR–81410–00	STATOR ASSY ESTATOR COMPLETO	1	1	1	1		
4	6GR–85561–01	BASE, MAGNETO BASE DE MAGNETO	1	1	1	1		
5	95022–06035	BOLT, FLANGE PERNO, DE BRIDA	6	6	6	6		
6	95D95–06030	BOLT, FLANGE DEEP RECESS CERROJO, REBORDE HUECO PROFUND	3	3	3	3		
7	6GR–85586–01	FAN VENTILADOR	1	1	1	1		
8	97E95–06516	BOLT, HEXAGON W/W DEEP RECESS TORNILLO HEXAGONAL CON RONDONA	4	4	4	4		
9	6GR–12651–00	AIR SHROUD, CYLINDER 1 CUBIERTA DE PASO DE AIRE 1	1	1	1	1		
10	95D95–06016	BOLT, FLANGE DEEP RECESS CERROJO, REBORDE HUECO PROFUND	3	3	3	3		
11	90464–12183	CLAMP BRIDA	1	1	1	1		
12	6GR–12653–01	AIR SHROUD, CYLINDER 3 CUBIERTA DE PASO DE AIRE 3	1	1	1	1		
13	95D95–06012	BOLT, FLANGE DEEP RECESS CERROJO, REBORDE HUECO PROFUND	5	5	5	5		
14	6GR–12659–00	DAMPER, AIR SHROUD 2 AMORTIGUADOR DE CUBIERTA 2	1	1	1	1		
15	6KN–12535–00	PLATE EMPAQUETADURA	1	1	1	1		
16	90269–05005	RIVET REMACHE	5	5	5	5		
17	6GR–81942–01	COVER CUBIERTA	1	1	1	1		
18	95D95–06025	BOLT, FLANGE DEEP RECESS CERROJO, REBORDE HUECO PROFUND	2	2	2	2		
19	90387–06119	COLLAR ESPACIADOR	2	2	2	2		
20	6A0–82317–01	DAMPER, IGNITION COIL AMORTIGUADOR BOBINA ENCENDIDO	2	2	2	2		
21	90480–12314	GROMMET TAPON	2	2	2	2		
22	6GR–81639–01	COVER TAPA	1	1	1	1		
23	95D95–06025	BOLT, FLANGE DEEP RECESS CERROJO, REBORDE HUECO PROFUND	2	2	2	2		
24	90387–06119	COLLAR ESPACIADOR	2	2	2	2		
25	6A0–82317–01	DAMPER, IGNITION COIL AMORTIGUADOR BOBINA ENCENDIDO	2	2	2	2		
26	90480–12314	GROMMET TAPON	2	2	2	2		
27	6GR–13437–61	MARK, CAUTION MARKER	1	1	1	1		EXCEPT FOR BRA EXCEPT FOR BRA

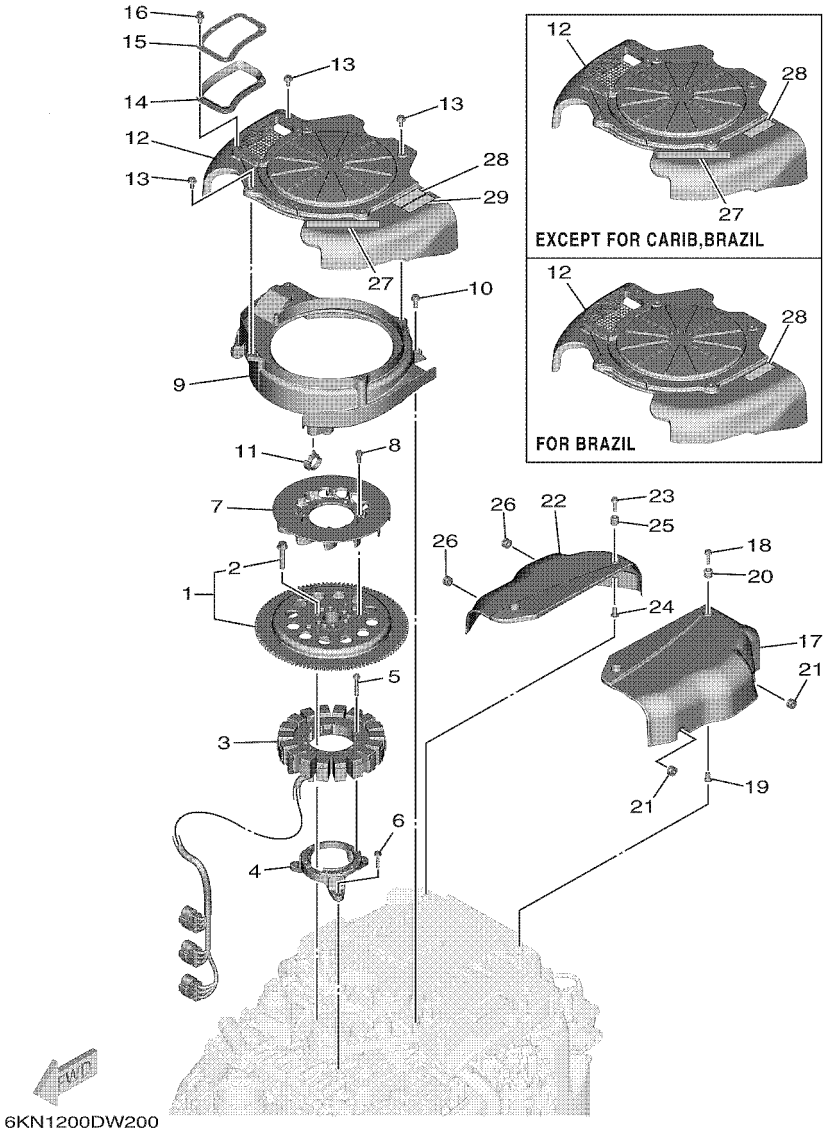

FIG. 20 GENERATOR — GENERADOR

REF. NO.	PART NO. CODIGO Nº	DESCRIPTION DESCRIPCION	6KN4	6LB4	6KP4	6LC4		REMARKS OBSERVACIONES
28	6EE–81994–41	LABEL, SAFETY ETIQUETA DE SEGURIDAD	1	1	1	1		EXCEPT FOR BRA EXCEPT FOR BRA
	6EE–81994–70	LABEL, SAFETY ETIQUETA DE SEGURIDAD	1		1			FOR BRA FOR BRA
29	6EE–81994–51	LABEL, SAFETY ETIQUETA DE SEGURIDAD	1		1			FOR CAR FOR CAR

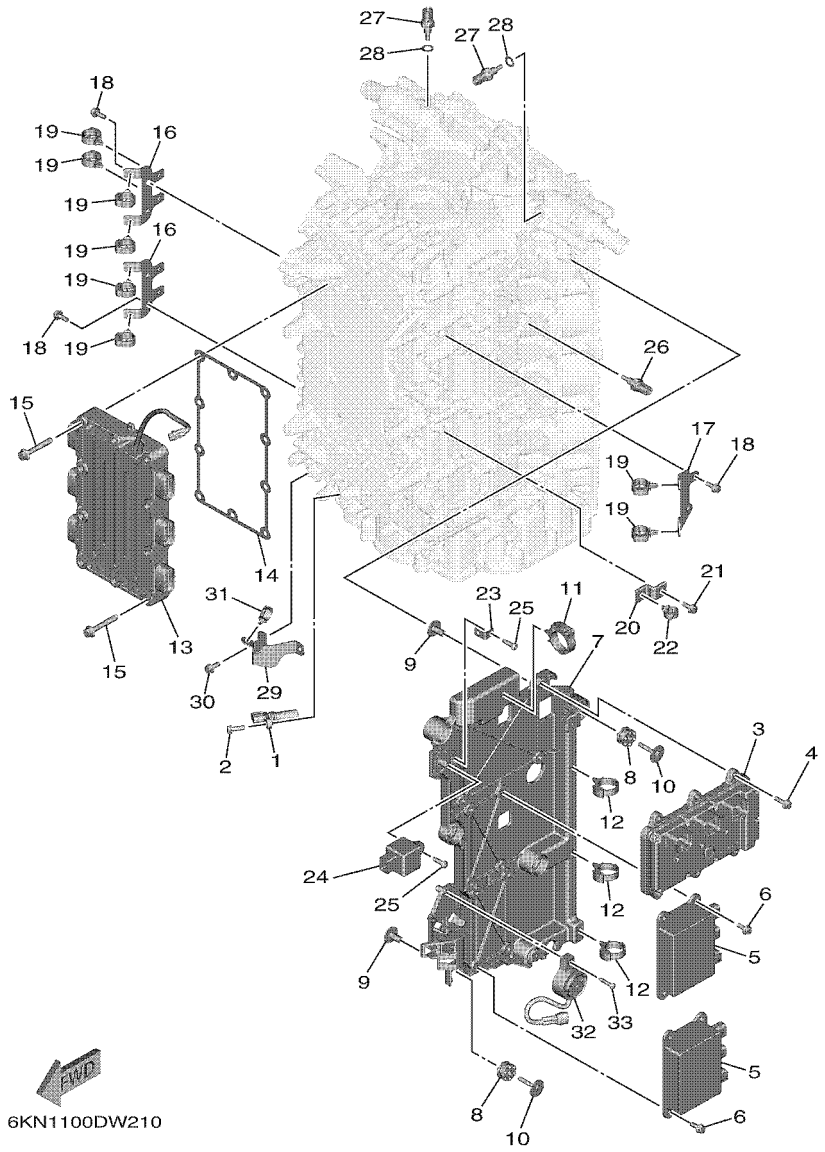

FIG. 21 ELECTRICAL 1 — EQUIPO ELECTRICO 1

REF. NO.	PART NO. CODIGO Nº	DESCRIPTION DESCRIPCION	6KN4	6LB4	6KP4	6LC4		REMARKS OBSERVACIONES
1	6GR–85895–00	CRANK POSITION SENSOR SENSOR, POSICION DE CIGUENAL	1	1	1	1		
2	97E95–06520	BOLT, HEXAGON W/W DEEP RECESS TORNILLO HEXAGONAL CON RONDONA	1	1	1	1		
3	6KN–8591A–00	ENGINE CONTROL UNIT ASSY UNIDAD CONTROL	1		1			EXCEPT FOR BRA EXCEPT FOR BRA
	6KN–8591A–10	ENGINE CONTROL UNIT ASSY UNIDAD CONTROL	1		1			FOR BRA FOR BRA
	6LB–8591A–00	ENGINE CONTROL UNIT ASSY UNIDAD CONTROL		1		1		
4	95D95–06020	BOLT, FLANGE DEEP RECESS CERROJO, REBORDE HUECO PROFUND	4	4	4	4		
5	6GR–8591B–00	DRIVER, INJECTOR ASSY CONDUCTOR, INYECTOR	2	2	2	2		
6	95D95–06016	BOLT, FLANGE DEEP RECESS CERROJO, REBORDE HUECO PROFUND	8	8	8	8		
7	6GR–81948–02	BRACKET SOPORTE	1	1	1	1		
8	60V–85564–00	GROMMET ANILLO PROTECTOR	6	6	6	6		
9	90387–06176	COLLAR ESPACIADOR	6	6	6	6		
10	68F–85119–00	BOLT PERNO	6	6	6	6		
11	90464–32002	CLAMP BRIDA	1	1	1	1		
12	90464–12183	CLAMP BRIDA	3	3	3	3		
13	6GR–81960–11	RECTIFIER & REGULATOR ASSY RECTIFICADOR Y REGULADOR	1		1			
	6GR–81960–00	RECTIFIER & REGULATOR ASSY RECTIFICADOR Y REGULADOR		1		1		
14	6GR–81975–00	PLATE, RECTIFIER FITTING PLACA ACCESORIA RECTIF.	1	1	1	1		
15	90105–08175	BOLT, FLANGE TORNILLO	10	10	10	10		
16	6GR–8132G–00	PLATE PLACA	2	2	2	2		
17	6GR–818D2–00	PLATE, 2 PLACA, 2	1	1	1	1		
18	95D95–06016	BOLT, FLANGE DEEP RECESS CERROJO, REBORDE HUECO PROFUND	6	6	6	6		
19	90464–20181	CLAMP BRIDA	8	8	8	8		
20	6DA–82388–00	PLATE PLACA	1	1	1	1		
21	95D95–06016	BOLT, FLANGE DEEP RECESS CERROJO, REBORDE HUECO PROFUND	1	1	1	1		
22	90464–13249	CLAMP BRIDA	1	1	1	1		
23	68V–85548–01	HOLDER SOSTEN	1	1	1	1		
24	68V–81950–00	RELAY ASSY RELE COMPLETO	1	1	1	1		

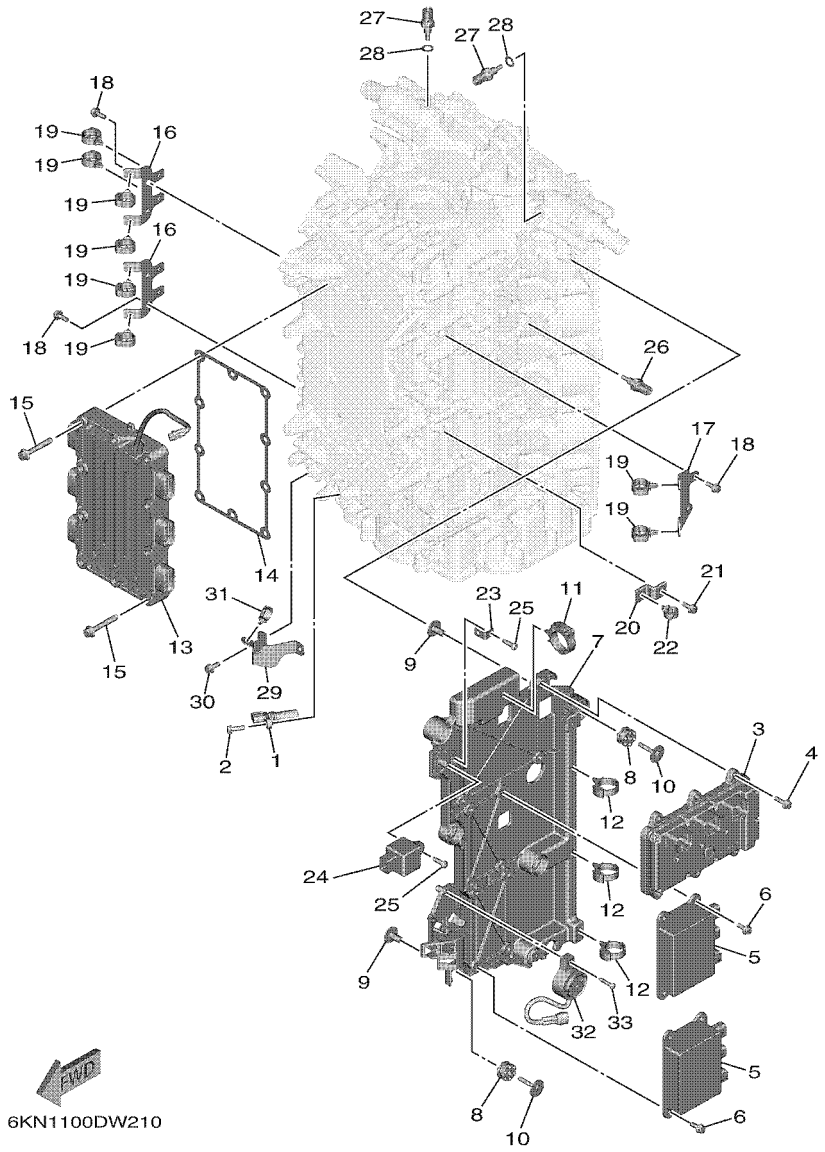

FIG. 21 ELECTRICAL 1 — EQUIPO ELECTRICO 1

REF. NO.	PART NO. CODIGO Nº	DESCRIPTION DESCRIPCION	6KN4	6LB4	6KP4	6LC4		REMARKS OBSERVACIONES
25	97780–60620	SCREW, TAPPING TORNILLO DE CABEZA DE CONO ACH	2	2	2	2		
26	4P9–83591–00	THERMO UNIT UNIDAD TERMOSTATO	1	1	1	1		
27	6GR–85790–00	THERMOSENSOR ASSY TERMICA SENSORIO	2	2	2	2		
28	90430–10004	GASKET JUNTA	2	2	2	2		
29	6GR–83614–00	BRACKET SOPORTE	1	1	1	1		
30	95D95–06016	BOLT, FLANGE DEEP RECESS CERROJO, REBORDE HUECO PROFUND	2	2	2	2		
31	90464–13249	CLAMP BRIDA	1	1	1	1		
32	6KA–83383–01	BUZZER ZUMBADOR	1	1	1	1		
33	97780–50625	SCREW, TAPPING TORNILLO DE CABEZA DE CONO ACH	1	1	1	1		

FIG. 22 ELECTRICAL 2 — EQUIPO ELECTRICO 2

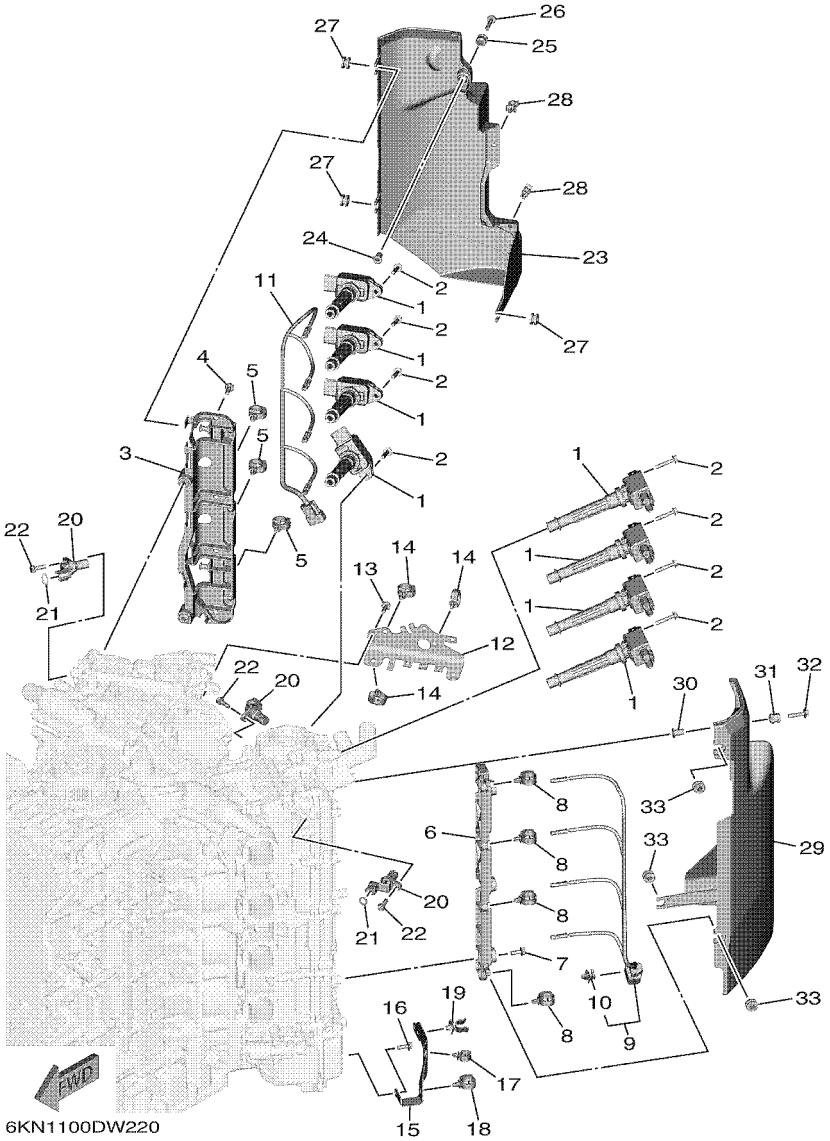

REF. NO.	PART NO. CODIGO Nº	DESCRIPTION DESCRIPCION	6KN4	6LB4	6KP4	6LC4		REMARKS OBSERVACIONES
1	6GR–82310–03	IGNITION COIL ASSY BOBINA DE ENCENDIDO COMPLETA	8	8	8	8		
2	90105–06028	BOLT, FLANGE TORNILLO	8	8	8	8		
3	6GR–8272F–01	PLATE, GUIDE 1 PLACA, GUIA 1	1	1	1	1		
4	95D95–06016	BOLT, FLANGE DEEP RECESS CERROJO, REBORDE HUECO PROFUND	5	5	5	5		
5	90464–20181	CLAMP BRIDA	3	3	3	3		
6	6GR–8272G–01	PLATE, GUIDE 2 PLACA, GUIA 2	1	1	1	1		
7	95D95–06016	BOLT, FLANGE DEEP RECESS CERROJO, REBORDE HUECO PROFUND	3	3	3	3		
8	90464–20181	CLAMP BRIDA	4	4	4	4		
9	6GR–82386–00	EXTENSION, WIRE HARNESS EXTENSION, ARNES DE CABLES	1	1	1	1		
10	90464–09M47	.CLAMP .BRIDA	1	1	1	1		
11	6GR–82386–10	EXTENSION, WIRE HARNESS EXTENSION, ARNES DE CABLES	1	1	1	1		
12	6GR–82388–01	PLATE PLACA	1	1	1	1		
13	95D95–06016	BOLT, FLANGE DEEP RECESS CERROJO, REBORDE HUECO PROFUND	2	2	2	2		
14	90464–20181	CLAMP BRIDA	3	3	3	3		
15	6GR–82389–00	PLATE 2 PLACA 2	1	1	1	1		
16	95D95–06016	BOLT, FLANGE DEEP RECESS CERROJO, REBORDE HUECO PROFUND	3	3	3	3		
17	90464–13249	CLAMP BRIDA	1	1	1	1		
18	90464–20181	CLAMP BRIDA	1	1	1	1		
19	90464–12015	CLAMP BRIDA	1	1	1	1		
20	6GR–85896–00	SENSOR, CAM POSITION SENSOR DE LEVA	3	3	3	3		
21	93210–11001	O-RING ANILLO O	2	2	2	2		
22	97E95–06520	BOLT, HEXAGON W/W DEEP RECESS TORNILLO HEXAGONAL CON RONDONA	3	3	3	3		
23	6GR–11186–01	COVER, CYLINDER HEAD SIDE 1 CUBIERTA CULATA CIL.LAT.1	1	1	1	1		
24	90387–06119	COLLAR ESPACIADOR	1	1	1	1		
25	6A0–82317–01	DAMPER, IGNITION COIL AMORTIGUADOR BOBINA ENCENDIDO	1	1	1	1		
26	95D95–06025	BOLT, FLANGE DEEP RECESS CERROJO, REBORDE HUECO PROFUND	1	1	1	1		
27	90480–12314	GROMMET TAPON	3	3	3	3		

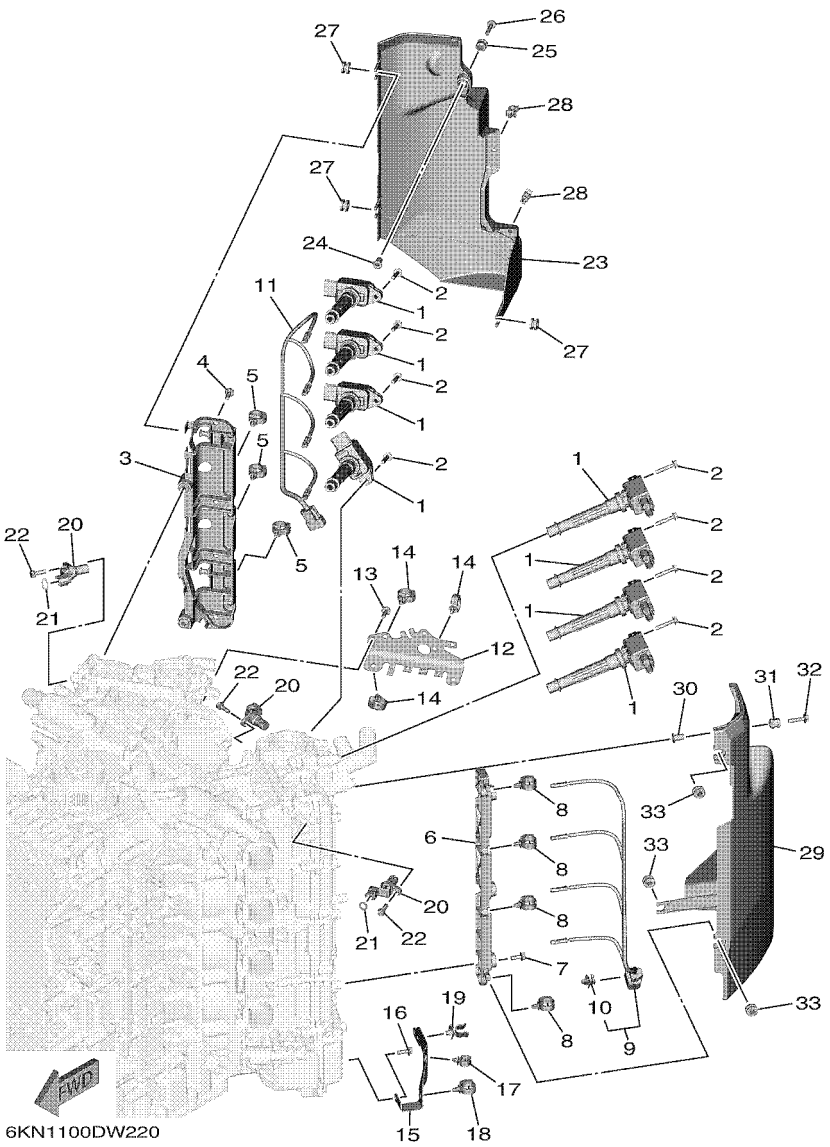

FIG. 22 ELECTRICAL 2 — EQUIPO ELECTRICO 2

REF. NO.	PART NO. CODIGO Nº	DESCRIPTION DESCRIPCION	6KN4	6LB4	6KP4	6LC4		REMARKS OBSERVACIONES
28	90464–09129	CLAMP BRIDA	2	2	2	2		
29	6GR–11187–01	COVER, CYLINDER HEAD SIDE 2 CUBIERTA CULATA CIL.LAT.2	1	1	1	1		
30	90387–06119	COLLAR ESPACIADOR	1	1	1	1		
31	6A0–82317–01	DAMPER, IGNITION COIL AMORTIGUADOR BOBINA ENCENDIDO	1	1	1	1		
32	95D95–06025	BOLT, FLANGE DEEP RECESS CERROJO, REBORDE HUECO PROFUND	1	1	1	1		
33	90480–12314	GROMMET TAPON	3	3	3	3		

FIG. 23 ELECTRICAL 3 — EQUIPO ELECTRICO 3

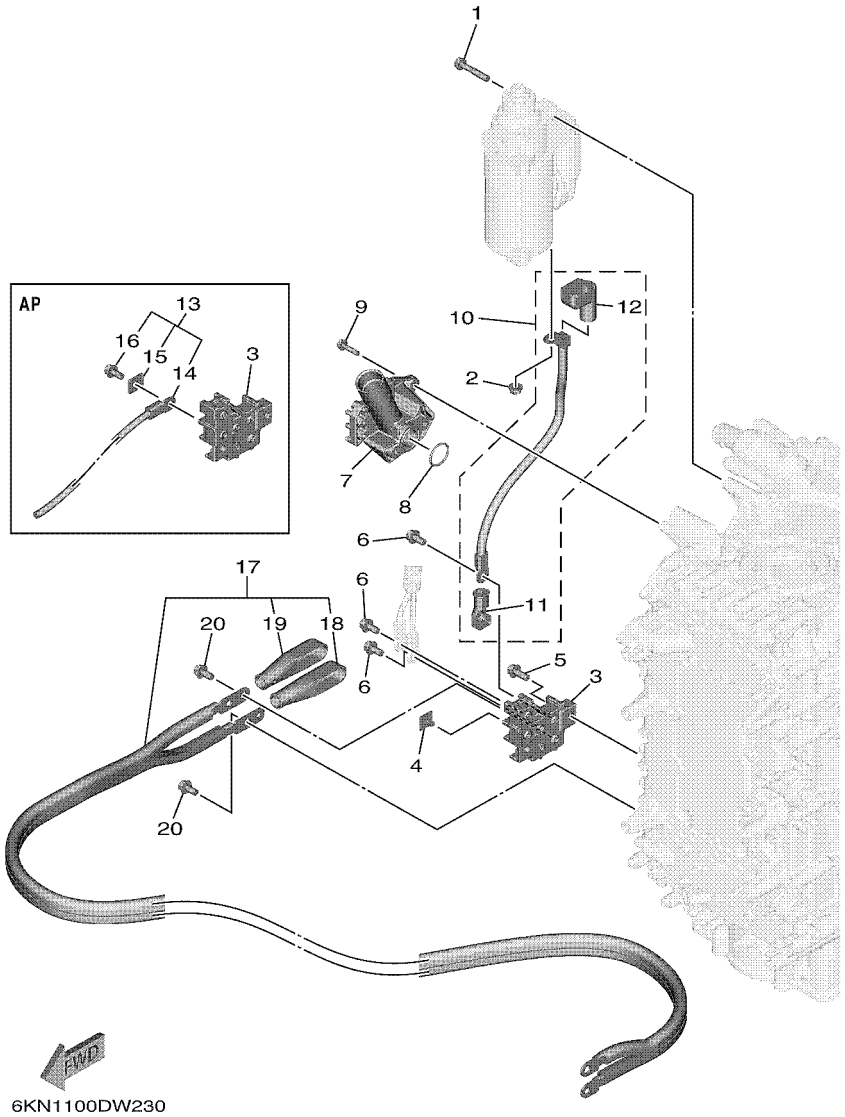

REF. NO.	PART NO. CODIGO Nº	DESCRIPTION DESCRIPCION	6KN4	6LB4	6KP4	6LC4		REMARKS OBSERVACIONES
1	97513–08545	BOLT, WITH WASHER PERNO CON ARANDELA	3	3	3	3		
2	90179–08003	NUT TUERCA	1	1	1	1		
3	6GR–81925–00	TERMINAL TERMINAL	1	1	1	1		
4	6GR–81916–00	COVER, TERMINAL CUBIERTA DE TERMINAL	1	1	1	1		
5	95D95–08020	BOLT, FLANGE DEEP RECESS CERROJO, REBORDE HUECO PROFUND	2	2	2	2		
6	95D95–08016	BOLT, FLANGE DEEP RECESS CERROJO, REBORDE HUECO PROFUND	3	3	3	3		
7	6GR–81929–00–9S	BRACKET, TERMINAL SOPORTE	1	1	1	1		
8	93210–27370	O-RING ANILLO O	1	1	1	1		
9	95D95–06025	BOLT, FLANGE DEEP RECESS CERROJO, REBORDE HUECO PROFUND	3	3	3	3		
10	6GR–82117–01	WIRE, LEAD CABLE CONDUCTOR	1	1	1	1		
11	6GR–82119–10	.COVER, LEAD WIRE .CUBIERTA DE CABLE CONDUCTOR	1	1	1	1		
12	6AW–82119–11	.COVER, LEAD WIRE .CUBIERTA DE CABLE CONDUCTOR	1	1	1	1		
13	6GR–762W0–01	WIRE HARNESS KIT CONJUNTO DE CABLES	1	1	1	1		ASK TO MARINE DIV ASK TO MARINE DIV
14	6GR–81949–01	.WIRE, LEAD (ISOLATOR, 3.8M) .CABLE CONDUCTOR, 3.8M	1	1	1	1		
15	6P2–81923–00	.WASHER .ARANDELA	1	1	1	1		
16	95D95–08016	.BOLT, FLANGE DEEP RECESS .CERROJO, REBORDE HUECO PROFUND	1	1	1	1		
17	6GR–82105–02	WIRE HARNESS ARNES DE CABLES	1	1	1	1		AP AP
18	6AW–82119–00	.COVER, LEAD WIRE .CUBIERTA DE CABLE CONDUCTOR	1	1	1	1		
19	6AW–82119–20	.COVER, LEAD WIRE .CUBIERTA DE CABLE CONDUCTOR	1	1	1	1		
20	95D95–08016	BOLT, FLANGE DEEP RECESS CERROJO, REBORDE HUECO PROFUND	3	3	3	3		AP AP

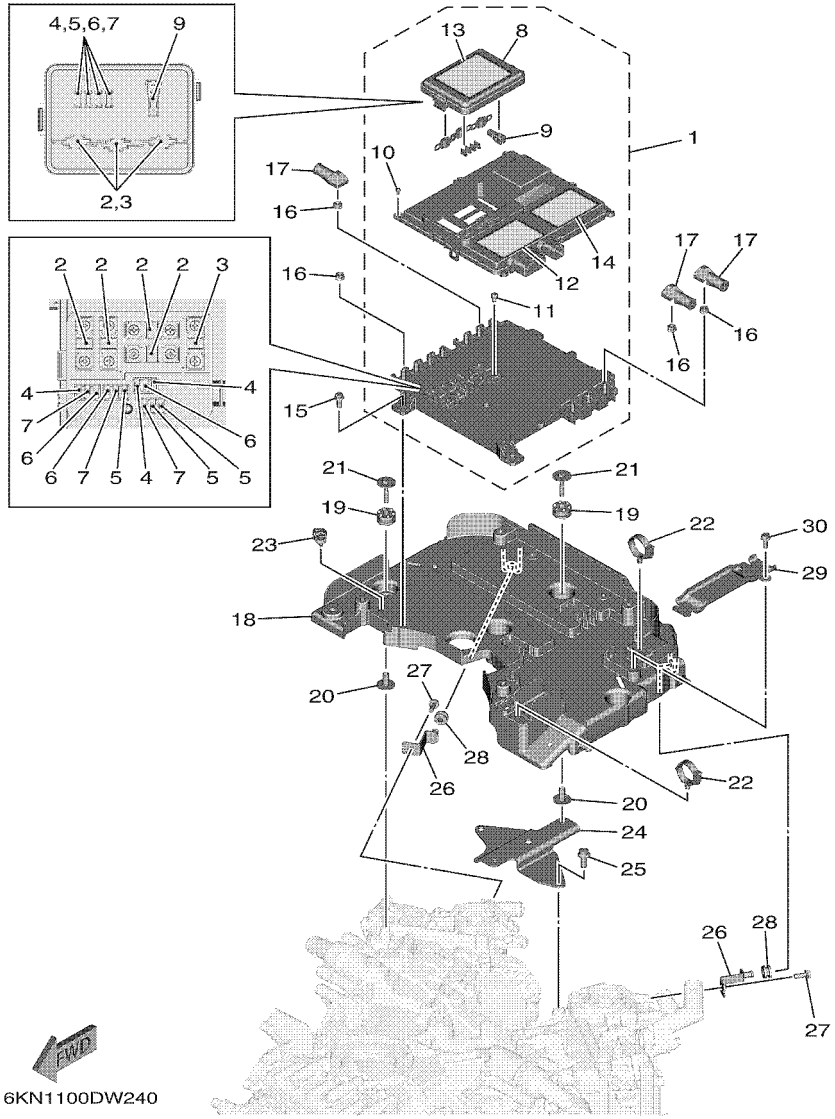

FIG. 24 ELECTRICAL 4 — EQUIPO ELECTRICO 4

REF. NO.	PART NO. CODIGO Nº	DESCRIPTION DESCRIPCION	6KN4	6LB4	6KP4	6LC4		REMARKS OBSERVACIONES
1	6GR–W85AA–02	ELECTRIC POWER MANAGEMENT UNIT UNIDAD DE ELECTRICA ENERGIA GE	1	1	1	1		
2	6GR–82151–10	.FUSE (70A) .FUSIBLE (70A)	6	6	6	6		
3	6GR–82151–00	.FUSE (100A) .FUSIBLE (100A)	2	2	2	2		
4	6CB–82151–00	.FUSE (10A) .FUSIBLE (10A)	4	4	4	4		
5	6CB–82151–10	.FUSE (15A) .FUSIBLE (15A)	4	4	4	4		
6	6CB–82151–20	.FUSE (20A) .FUSIBLE (20A)	4	4	4	4		
7	6CB–82151–30	.FUSE (30A) .FUSIBLE (30A)	4	4	4	4		
8	6GR–85544–00	.CASE .CAJA	1	1	1	1		
9	6CB–2812A–00	.PULLER, FUSE .TIRADOR DE FUSIBLE	1	1	1	1		
10	6P2–82113–00	.SCREW (M3) .TORNILLO (M3)	7	7	7	7		
11	68F–82846–00	.SCREW, PAN HEAD (M5) .TORNILLO (M5)	10	10	10	10		
12	6GR–81919–01	.GRAPHIC, REGULATOR .CALCAMONIA DE REGULADOR	1	1	1	1		
13	6GR–81919–11	.GRAPHIC, REGULATOR .CALCAMONIA DE REGULADOR	1	1	1	1		
14	6GR–81919–20	.GRAPHIC, REGULATOR .CALCAMONIA DE REGULADOR	1	1	1	1		
15	95D95–06016	BOLT, FLANGE DEEP RECESS CERROJO, REBORDE HUECO PROFUND	4	4	4	4		
16	95780–06500	NUT, FLANGE TUERCA	10	10	10	10		
17	6GR–82119–00	COVER, LEAD WIRE CUBIERTA DE CABLE CONDUCTOR	3	3	3	3		
18	6GR–82589–00	PROTECTER, WIRE HARNESS PROTECTOR DE ARNES DE CABLE	1	1	1	1		
19	68F–85516–01	SPACER ESPACIADOR	4	4	4	4		
20	90387–06176	COLLAR ESPACIADOR	4	4	4	4		
21	68F–85119–00	BOLT PERNO	4	4	4	4		
22	90464–30001	CLAMP BRIDA	2	2	2	2		
23	90464–13249	CLAMP BRIDA	1	1	1	1		
24	6KN–82171–00	STAY, FUSE BOX SOPORTE CAJA DE FUSIBLES	1	1	1	1		
25	95D95–08020	BOLT, FLANGE DEEP RECESS CERROJO, REBORDE HUECO PROFUND	2	2	2	2		
26	6GR–8272U–00	PLATE, JOINT PLATO, JUNTA	2	2	2	2		
27	95D95–06016	BOLT, FLANGE DEEP RECESS CERROJO, REBORDE HUECO PROFUND	2	2	2	2		

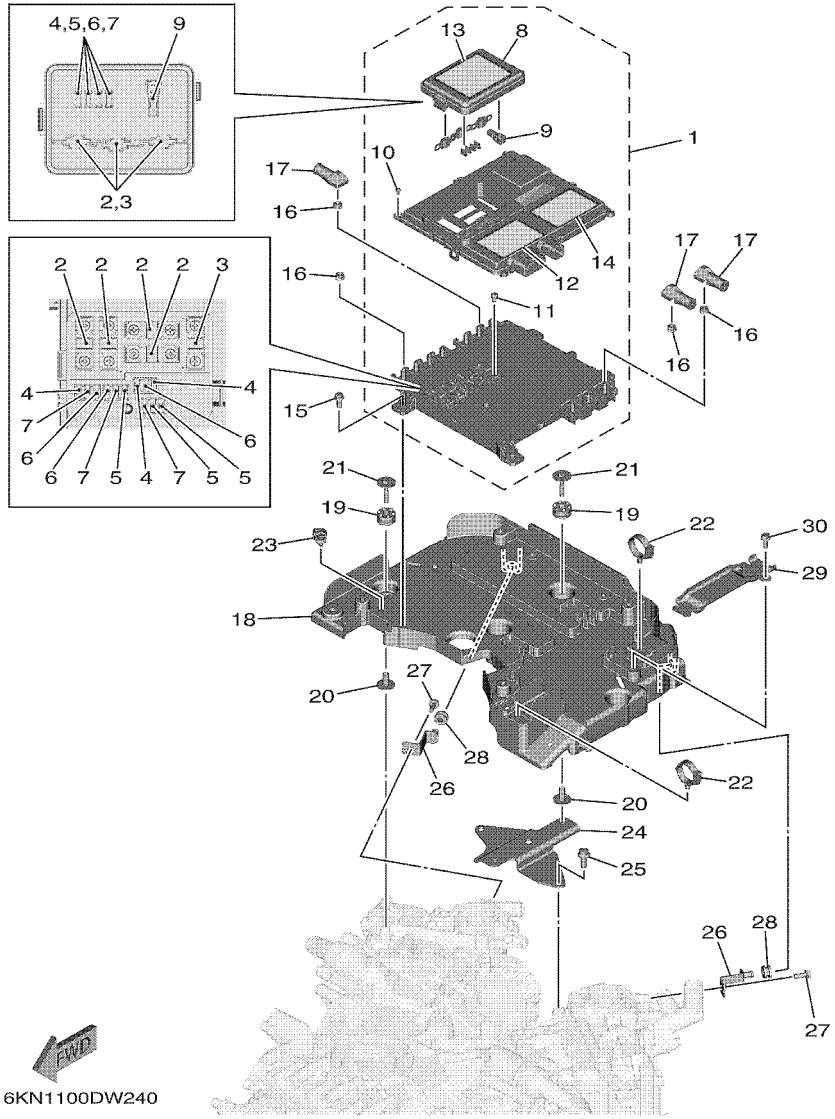

FIG. 24 ELECTRICAL 4 — EQUIPO ELECTRICO 4

REF. NO.	PART NO. CODIGO Nº	DESCRIPTION DESCRIPCION	6KN4	6LB4	6KP4	6LC4		REMARKS OBSERVACIONES
28	90480–12314	GROMMET TAPON	2	2	2	2		
29	6GR–85525–00	COVER CUBIERTA	1	1	1	1		
30	95D95–06016	BOLT, FLANGE DEEP RECESS CERROJO, REBORDE HUECO PROFUND	1	1	1	1		

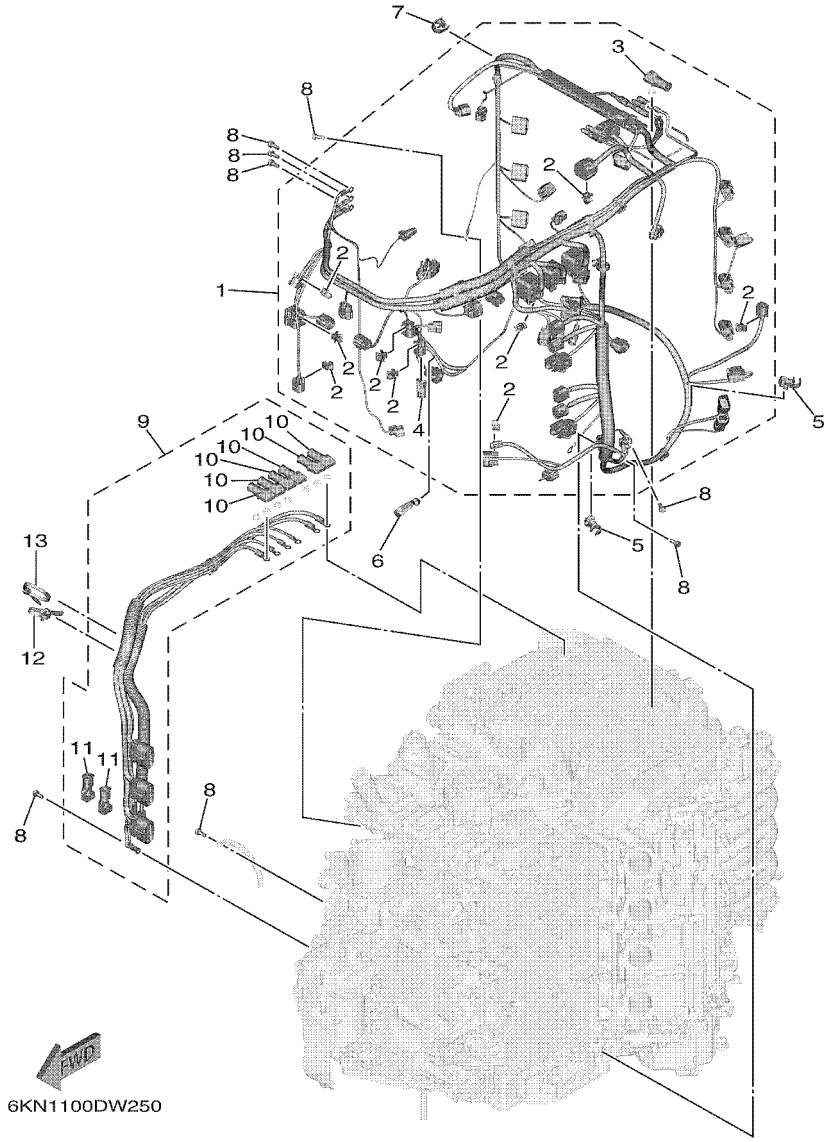

FIG. 25 ELECTRICAL 5 — EQUIPO ELECTRICO 5

REF. NO.	PART NO. CODIGO Nº	DESCRIPTION DESCRIPCION	6KN4	6LB4	6KP4	6LC4		REMARKS OBSERVACIONES
1	6KN–82590–01	WIRE HARNESS ASSY CONJUNTO DE CABLES	1		1			
	6LB–82590–01	WIRE HARNESS ASSY CONJUNTO DE CABLES		1		1		
2	90464–09M47	.CLAMP .BRIDA	9	9	9	9		
3	6GR–82119–00	.COVER, LEAD WIRE .CUBIERTA DE CABLE CONDUCTOR	1	1	1	1		
4	68V–82582–10	.CAP 1 (2P) .TAPA 1 (2P)	1	1	1	1		
5	90464–12012	CLAMP BRIDA	2	2	2	2		
6	90465–13M24	CLAMP BRIDA	1	1	1	1		
7	90464–18004	CLAMP BRIDA	1	1	1	1		
8	97E95–06516	BOLT, HEXAGON W/W DEEP RECESS TORNILLO HEXAGONAL CON RONDONA	8	8	8	8		
9	6GR–8259M–00	WIRE HARNESS ASSY 2 ARNES DE CABLES	1	1	1	1		
10	6GR–82119–00	.COVER, LEAD WIRE .CUBIERTA DE CABLE CONDUCTOR	6	6	6	6		
11	6GR–82119–10	.COVER, LEAD WIRE .CUBIERTA DE CABLE CONDUCTOR	2	2	2	2		
12	90464–44002	CLAMP BRIDA	1	1	1	1		
13	90464–15195	CLAMP BRIDA	1	1	1	1		

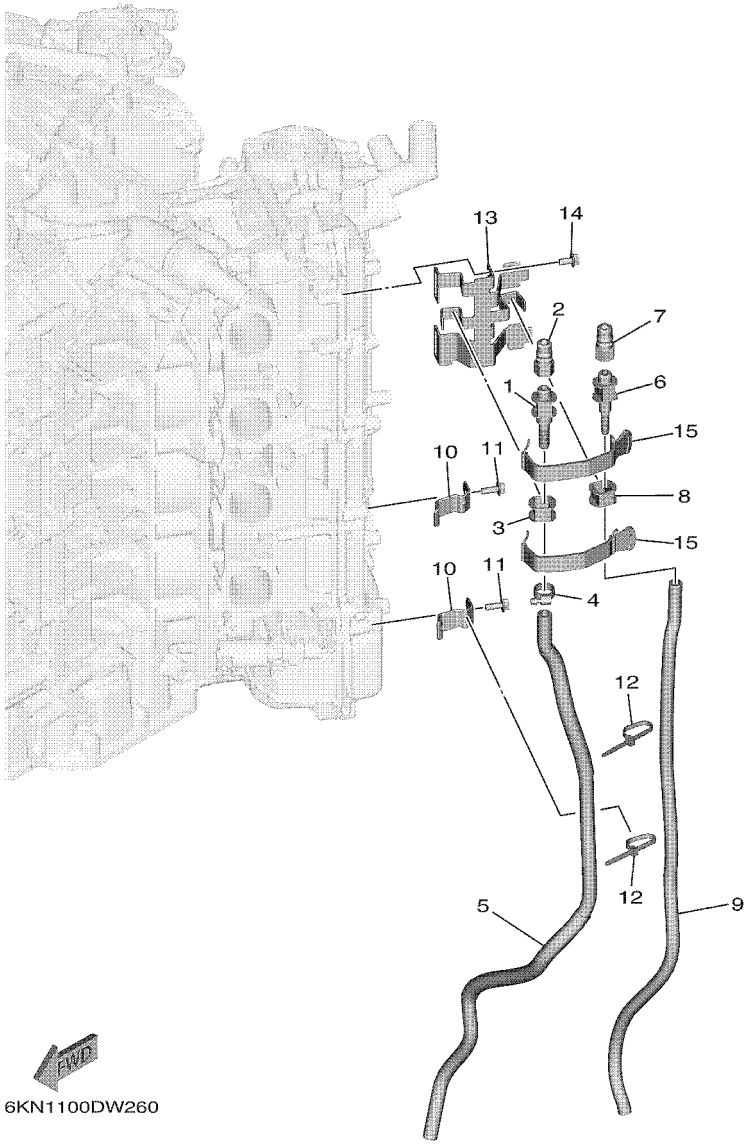

FIG. 26 ELECTRICAL 6 — EQUIPO ELECTRICO 6

REF. NO.	PART NO. CODIGO Nº	DESCRIPTION DESCRIPCION	6KN4	6LB4	6KP4	6LC4		REMARKS OBSERVACIONES
1	6GR–45394–01	HOSE, FITTING 1 MANGUERA, MONTAJE 1	1	1	1	1		
2	6GR–45393–00	COUPLER ACOPLADOR	1	1	1	1		
3	6GR–81662–00	COVER, CONNECTER CUBIERTA DE CONECTOR	1	1	1	1		
4	90450–14M05	HOSE CLAMP ASSY BRIDA, MANGUERA	1	1	1	1		
5	6GR–4383E–01	HOSE, OIL 2 MANGUERA DE ACEITE 2	1	1	1	1		
6	6GR–45395–00	HOSE, FITTING 2 MANGUERA, MONTAJE 2	1	1	1	1		
7	6GR–45393–00	COUPLER ACOPLADOR	1	1	1	1		
8	6GR–82599–00	COVER, CONNECTOR CUBIERTA DE CONECTOR	1	1	1	1		
9	6GR–2318K–00	HOSE, AIR 2 MANGUERA AIRE 2	1	1	1	1		
10	6GR–81443–00	CLAMP, LEAD 1 GRAMPA DE CABLE 1	2	2	2	2		
11	95D95–06016	BOLT, FLANGE DEEP RECESS CERROJO, REBORDE HUECO PROFUND	2	2	2	2		
12	90465–13M97	CLAMP BRIDA	2	2	2	2		
13	6GR–81845–00	PLATE PLACA	1	1	1	1		
14	95D95–06012	BOLT, FLANGE DEEP RECESS CERROJO, REBORDE HUECO PROFUND	2	2	2	2		
15	6GR–82131–01	BAND, BATTERY TIRANTE DE BATERIA	2	2	2	2		

FIG. 27 ELECTRICAL 7 — EQUIPO ELECTRICO 7

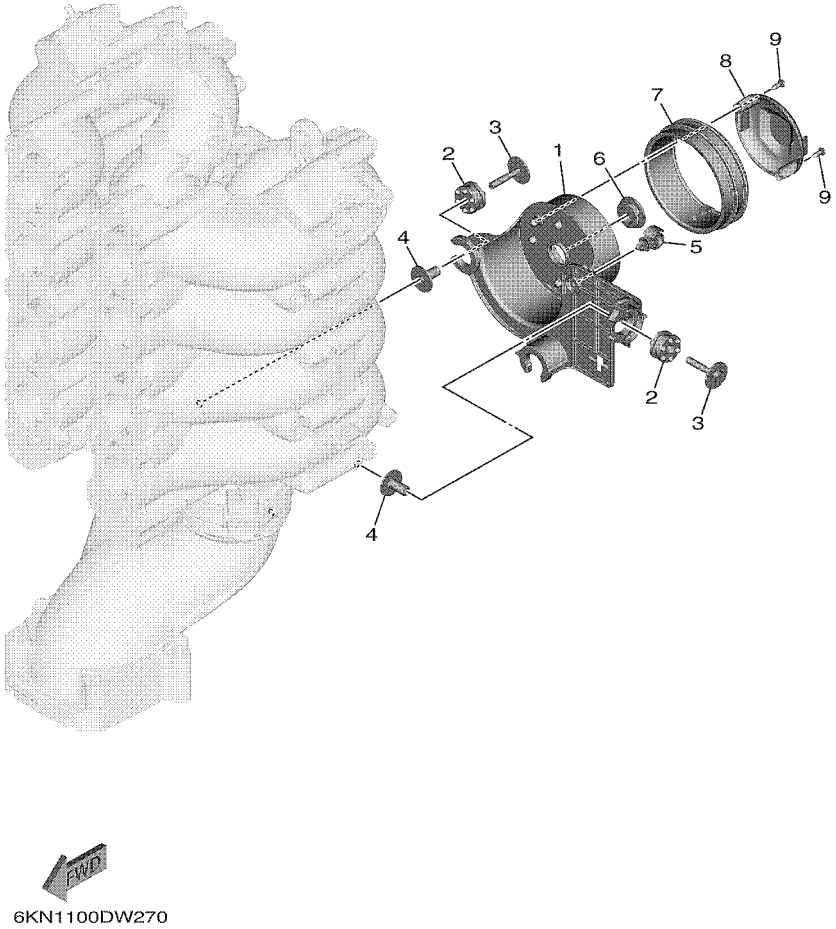

REF. NO.	PART NO. CODIGO Nº	DESCRIPTION DESCRIPCION	6KN4	6LB4	6KP4	6LC4		REMARKS OBSERVACIONES
1	6KN–85112–00	BRACKET, REFLECTOR 1 SOPORTE DE REFLECTOR 1	1	1	1	1		
2	68F–85516–01	SPACER ESPACIADOR	3	3	3	3		
3	68F–85119–00	BOLT PERNO	3	3	3	3		
4	90387–06176	COLLAR ESPACIADOR	3	3	3	3		
5	90464–13249	CLAMP BRIDA	1	1	1	1		
6	676–42726–00	GROMMET TAPON	1	1	1	1		
7	6KN–41273–00	GROMMET TAPON PROTECTOR	1	1	1	1		
8	6KN–42532–00	COVER CUBIERTA	1	1	1	1		
9	97780–40112	SCREW, OVAL HEAD TAPPING TORNILLO DE CABEZA DE CONO ACH	2	2	2	2		

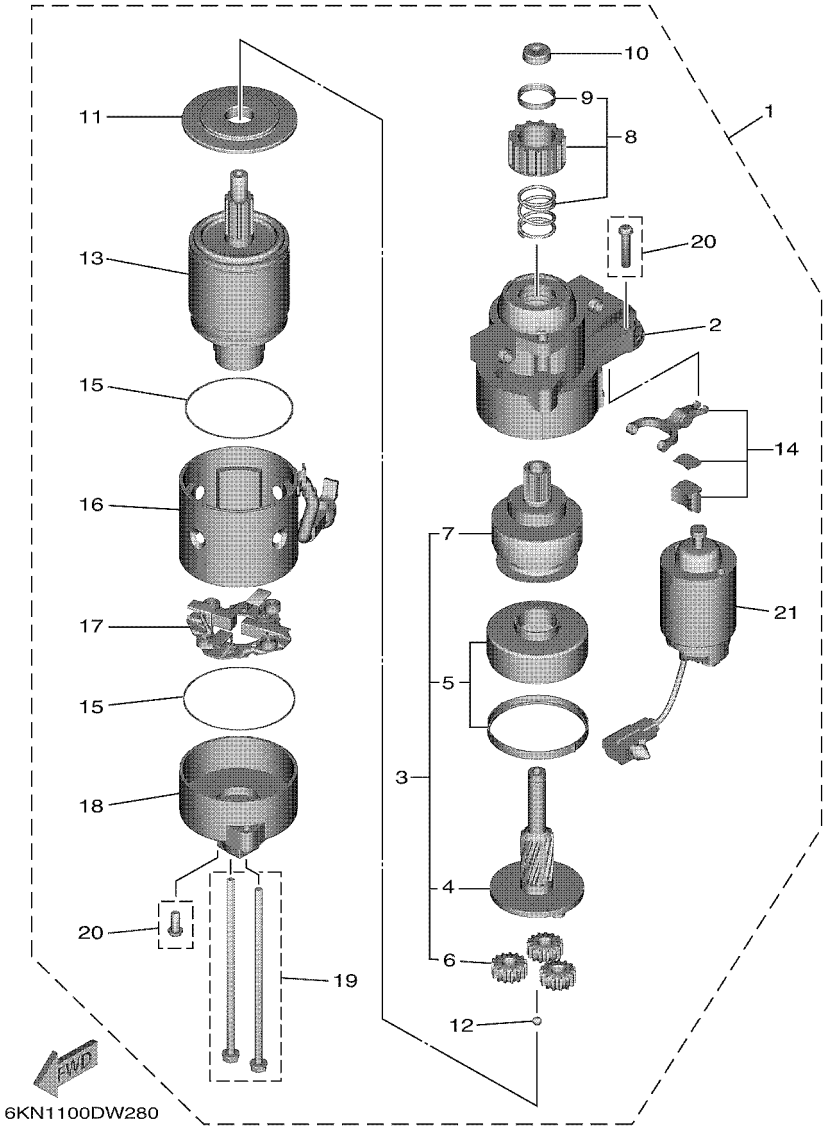

FIG. 28 STARTING MOTOR — MOTOR DE ARRANQUE

REF. NO.	PART NO. CODIGO Nº	DESCRIPTION DESCRIPCION	6KN4	6LB4	6KP4	6LC4		REMARKS OBSERVACIONES
1	6AW–81800–02	STARTING MOTOR ASSY MOTOR DE ARRANQUE COMPLETO	1	1	1	1		
2	6AW–81830–00	.FRONT BRACKET ASSY .SOPORTE DELANTERO COMPLETO	1	1	1	1		
3	6AW–81807–02	.GEAR ASSY, STARTING MOTOR .PINON CONJUNTO	1	1	1	1		
4	6AW–81836–00	..SHAFT, PINION ..ARBOL, PINON	1	1	1	1		
5	6AW–81891–01	..GEAR, RING ..ENGRANAJE ANILLO	1	1	1	1		
6	6AW–8183T–00	..GEAR, IDLER ..ENGRENAJE NEUTRO	3	3	3	3		
7	6AW–81832–01	..CLUTCH, OVER RUN ..PINON COMPL	1	1	1	1		
8	6AW–81808–00	.PINION ASSY .PINON	1	1	1	1		
9	6AW–81857–00	..PINION STOPPER SET ..JUEGO TAPON PINON	1	1	1	1		
10	6AW–81862–00	.CAP .TAPA	1	1	1	1		
11	6AW–8183R–01	.PLATE .PLACA	1	1	1	1		
12	6AW–81854–00	.BALL, STEEL .BOLA DE ACERO	1	1	1	1		
13	6AW–81850–00	.ARMATURE ASSY .INDUCIDO COMPLETO	1	1	1	1		
14	6AW–81839–00	.LEVER ASSY .PALANCA COMPL.	1	1	1	1		
15	6AW–81842–00	.PACKING .EMPAQUE	2	2	2	2		
16	6AW–81810–01	.STATOR ASSY .ESTATOR COMPLETO	1	1	1	1		
17	6AW–81840–00	.BRUSH HOLDER ASSY .SOSTEN DE ESCOBILLA COMPLETO	1	1	1	1		
18	6AW–81820–00	.REAR BRACKET ASSY .CUBIERTA TRASERA COMPL	1	1	1	1		
19	6AW–81826–00	.BOLT .PERNO	1	1	1	1		
20	6AW–81846–00	.SCREW .TORNILLO	1	1	1	1		
21	6AW–81941–00	.STARTER RELAY ASSY .RELE DE ARRANQUE	1	1	1	1		

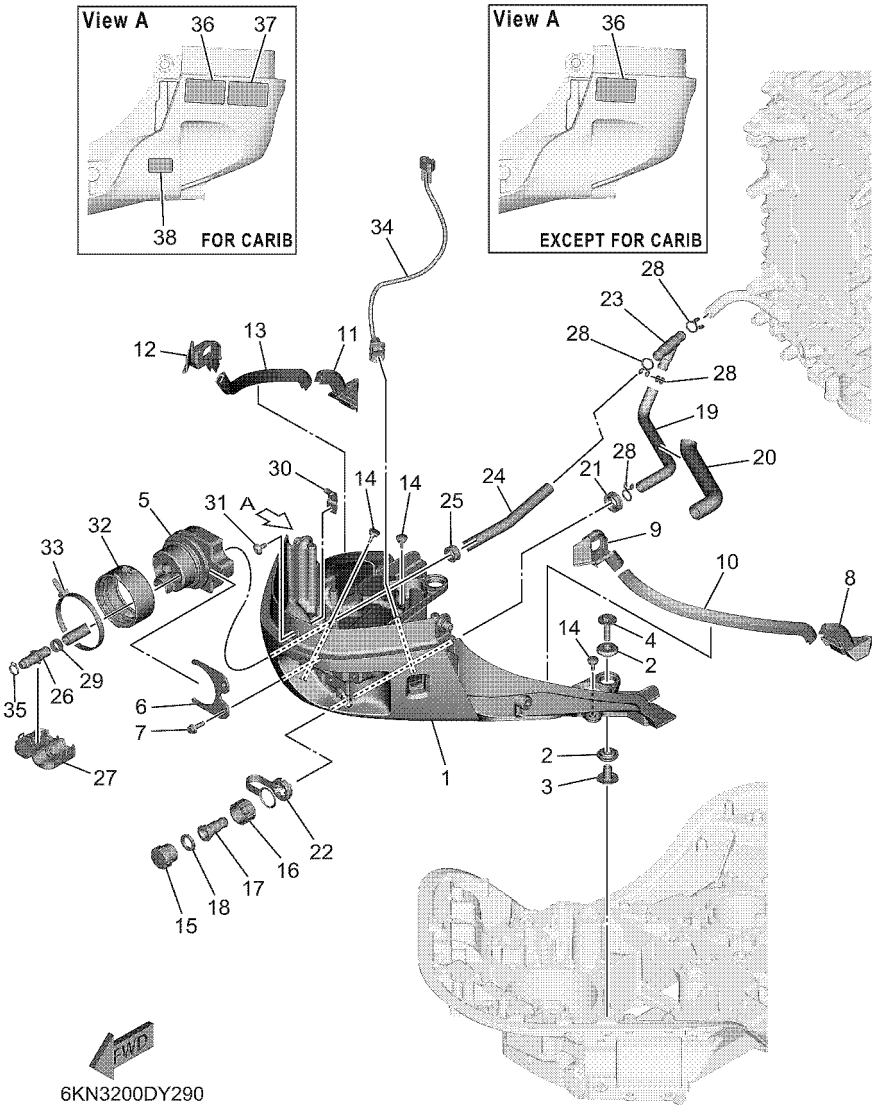

FIG. 29 BOTTOM COWLING 1 — CUBIERTA INFERIOR 1

REF. NO.	PART NO. CODIGO Nº	DESCRIPTION DESCRIPCION	6KN4	6LB4	6KP4	6LC4		REMARKS OBSERVACIONES
1	6KN–42711–00–8D	COWLING, BOTTOM 1 CUBIERTA INFERIOR 1	1	1	1	1		UR GRAY UR GRAY
	6KN–42711–00–CE	COWLING, BOTTOM 1 CUBIERTA INFERIOR 1	1		1			UR WHITE UR WHITE
2	90480–22M81	GROMMET TAPON	4	4	4	4		
3	90387–08M37	COLLAR ESPACIADOR	2	2	2	2		
4	90119–08187	BOLT, WITH WASHER TORNILLO CON ARANDELA	2	2	2	2		
5	6GR–42725–02	GROMMET TAPON	1	1	1	1		
6	6GR–42761–00	STOPPER RETEN 1	1	1	1	1		
7	95D95–06020	BOLT, FLANGE DEEP RECESS CERROJO, REBORDE HUECO PROFUND	2	2	2	2		
8	6KN–42717–00	RUBBER, SEAL 2 GOMA	1	1	1	1		
9	6KN–42726–00	GROMMET TAPON	1	1	1	1		
10	6KN–42617–00	DAMPER, FORM HULE DE FORMA	1	1	1	1		
11	6KN–42718–00	RUBBER, SEAL 3 GOMA	1	1	1	1		
12	6KN–42727–00	GROMMET TAPON	1	1	1	1		
13	6KN–42617–00	DAMPER, FORM HULE DE FORMA	1	1	1	1		
14	6H4–42748–01	GROMMET TAPON	3	3	3	3		
15	6KN–11313–00	PLUG, BLIND TAPON CIEGO	1	1	1	1		
16	6R3–12581–00	JOINT, HOSE 1 CONEXION	1	1	1	1		
17	6KN–12582–00	JOINT, HOSE 2 CONEXION	1	1	1	1		
18	6R3–12583–00	GASKET, HOSE JOINT EMPAQUETADURA JUNTA DE MANGUE	1	1	1	1		
19	6KN–12577–00	HOSE 2 MANGUERA 2	1	1	1	1		
20	6KN–12578–00	HOSE 3 MANGUERA 3	1	1	1	1		
21	6KN–82535–00	GROMMET ARANDELA DE REFUERZO	1	1	1	1		
22	6KN–26393–00	HOLDER SOPORTE	1	1	1	1		
23	6GR–24378–10	PIPE, JOINT 3 TUBO DE UNION 3	1	1	1	1		
24	90445–16025	HOSE (L290) TUBO (L290)	1	1	1	1		
25	90480–20M05	GROMMET TAPON	1	1	1	1		
26	6GR–83558–00	END, NIPPLE EXTREMO DE NIPLE	1	1	1	1		

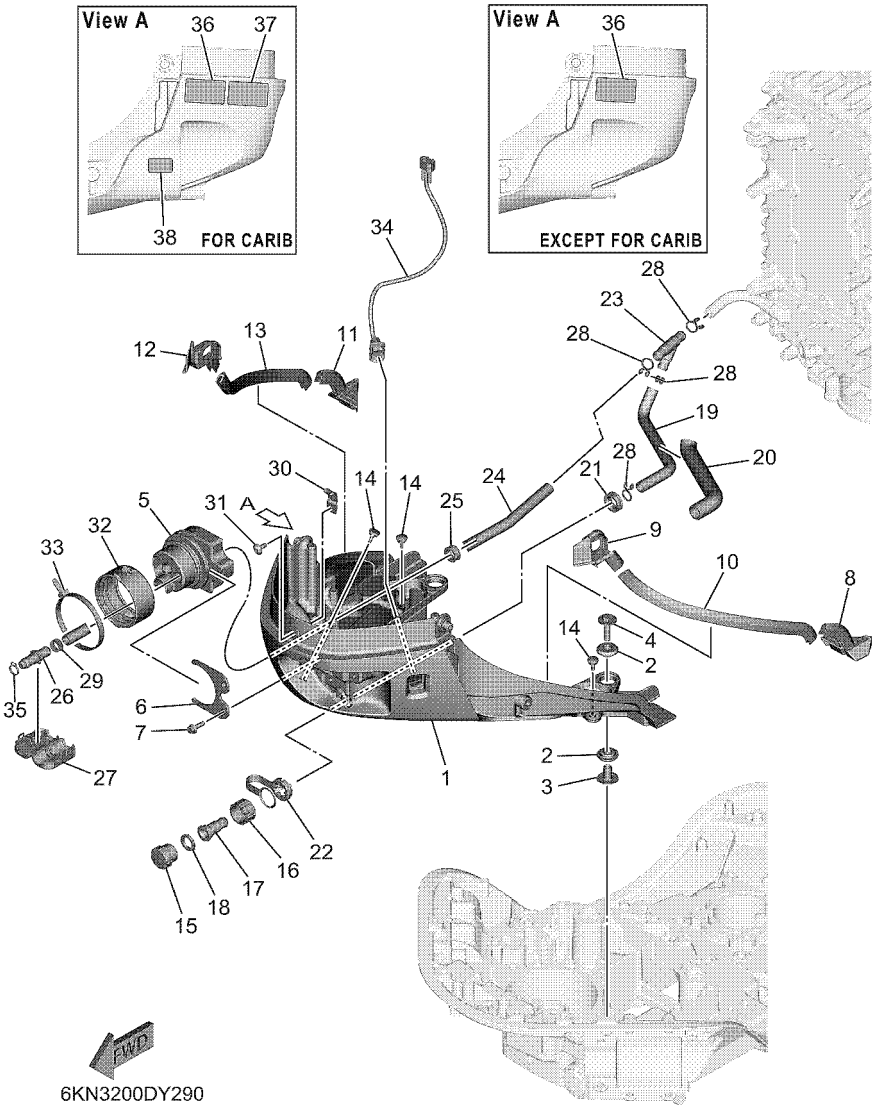

FIG. 29 BOTTOM COWLING 1 — CUBIERTA INFERIOR 1

REF. NO.	PART NO. CODIGO Nº	DESCRIPTION DESCRIPCION	6KN4	6LB4	6KP4	6LC4		REMARKS OBSERVACIONES
27	6GR–24452–00	COVER CUBIERTA	1	1	1	1		
28	90467–160A7	CLIP PRESILLA	4	4	4	4		
29	90467–150A5	CLIP PRESILLA	1	1	1	1		
30	6GR–44554–00	PLATE PLACA	1	1	1	1		
31	90111–06144	BOLT, HEXAGON SOCKET BUTTON TORNILLO	1	1	1	1		
32	6GR–42753–00	FASTNER TIRADOR	1	1	1	1		AP AP
33	90464–99006	CLAMP BRIDA	1	1	1	1		AP AP
34	6GR–82563–00	TRIM & TILT SWITCH INTERRUPTOR DE INCLINACION	1	1	1	1		
35	90460–15227	CLAMP, HOSE BRIDA, DE UNION	1	1	1	1		AP AP
36	6EE–42794–41	LABEL, WARNING (GENERAL) ETIQUETA DE PRECAUCION	1	1	1	1		EXCEPT FOR BRA EXCEPT FOR BRA
	6EE–42794–71	LABEL, WARNING (GENERAL) ETIQUETA DE PRECAUCION	1		1			FOR BRA FOR BRA
37	6EE–42794–51	LABEL, WARNING (GENERAL) ETIQUETA DE PRECAUCION	1		1			FOR CAR FOR CAR
38	6AH–81996–01	MARK MARCA	1		1			FOR CAR FOR CAR

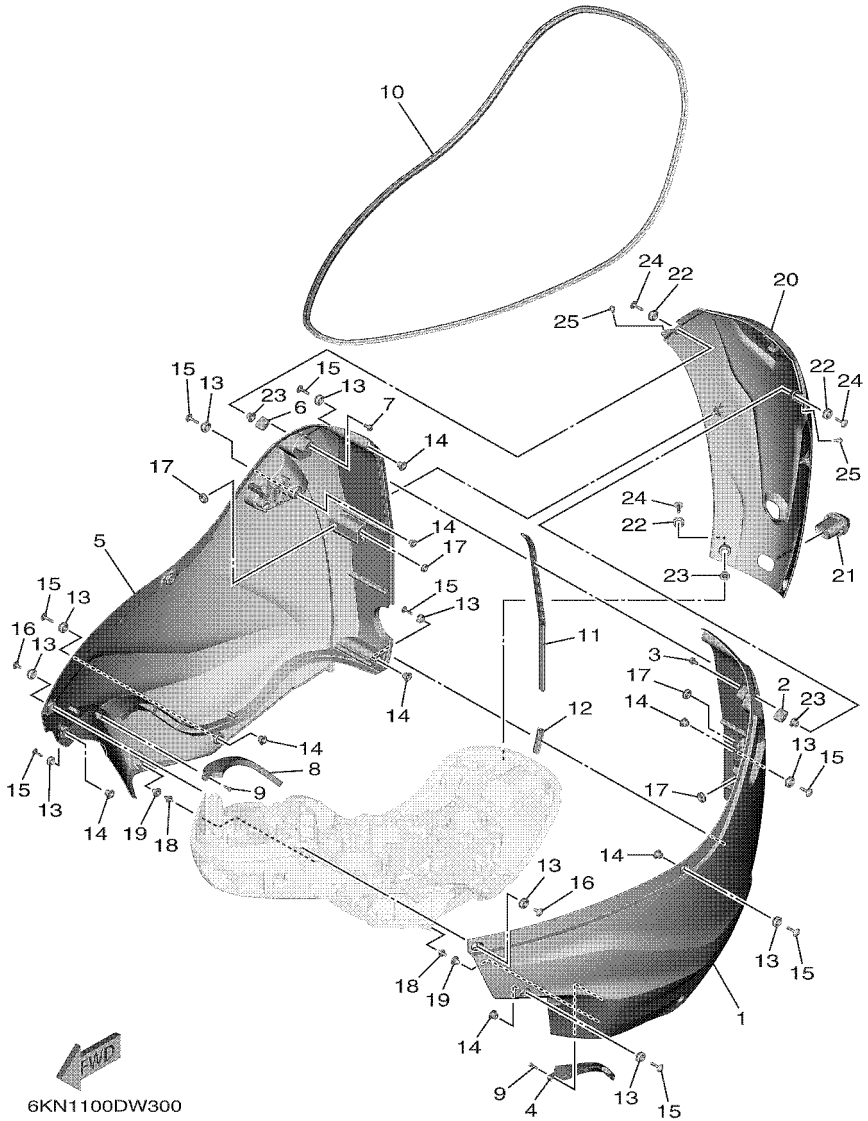

FIG. 30 BOTTOM COWLING 2 — CUBIERTA INFERIOR 2

REF. NO.	PART NO. CODIGO Nº	DESCRIPTION DESCRIPCION	6KN4	6LB4	6KP4	6LC4		REMARKS OBSERVACIONES
1	6KN–42712–00–8D	COWLING, BOTTOM 2 CUBIERTA INFERIOR 2	1	1	1	1		UR GRAY UR GRAY
	6KN–42712–00–CE	COWLING, BOTTOM 2 CUBIERTA INFERIOR 2	1		1			UR WHITE UR WHITE
2	6GR–42744–00	STAY SOPORTE	1	1	1	1		
3	95D95–06012	BOLT, FLANGE DEEP RECESS CERROJO, REBORDE HUECO PROFUND	2	2	2	2		
4	6GR–42622–01	SIDE, MOLE COWLING 1 LADO, MOLDURA CUBERTURA 1	1	1	1	1		
5	6KN–42713–00–8D	COWLING, BOTTOM 3 CUBIERTA INFERIOR 3	1	1	1	1		UR GRAY UR GRAY
	6KN–42713–00–CE	COWLING, BOTTOM 3 CUBIERTA INFERIOR 3	1		1			UR WHITE UR WHITE
6	6GR–42744–00	STAY SOPORTE	1	1	1	1		
7	95D95–06012	BOLT, FLANGE DEEP RECESS CERROJO, REBORDE HUECO PROFUND	2	2	2	2		
8	6GR–42623–01	SIDE, MOLE COWLING 2 LADO, MOLDURA CUBERTURA 2	1	1	1	1		
9	90167–05017	SCREW, TAPPING TORNILLO DE ROSCA HEMBRA	4	4	4	4		
10	6GR–42615–00	SEAL SELLO	1	1	1	1		
11	6KN–42769–00	SEAL, RUBBER SELLO DE GOMA	1	1	1	1		
12	6KN–44522–00	SEAL SELLO DE GOMA	1	1	1	1		
13	90480–16015	GROMMET TAPON	14	14	14	14		
14	6GR–42758–00	COLLAR COLLAR	12	12	12	12		
15	90111–06175	BOLT, HEXAGON SOCKET BUTTON TORNILLO	12	12	12	12		
16	90111–06176	BOLT, HEXAGON SOCKET BUTTON TORNILLO	2	2	2	2		
17	90480–13034	GROMMET TAPON	4	4	4	4		
18	69J–42774–10	STAY, APRON 1 BUJEDEL PIVOTE DE LA FLECHA	2	2	2	2		
19	6GR–42768–01	DAMPER AMORTIGUADOR	2	2	2	2		
20	6KN–42625–00–8D	PANEL, REAR TABLERO	1	1	1	1		UR GRAY UR GRAY
	6KN–42625–00–CE	PANEL, REAR TABLERO	1		1			UR WHITE UR WHITE
21	6GR–42748–01	GROMMET TAPON	1	1	1	1		
22	90480–16015	GROMMET TAPON	4	4	4	4		
23	6GR–42758–00	COLLAR COLLAR	4	4	4	4		
24	90111–06175	BOLT, HEXAGON SOCKET BUTTON TORNILLO	4	4	4	4		

FIG. 30 BOTTOM COWLING 2 — CUBIERTA INFERIOR 2

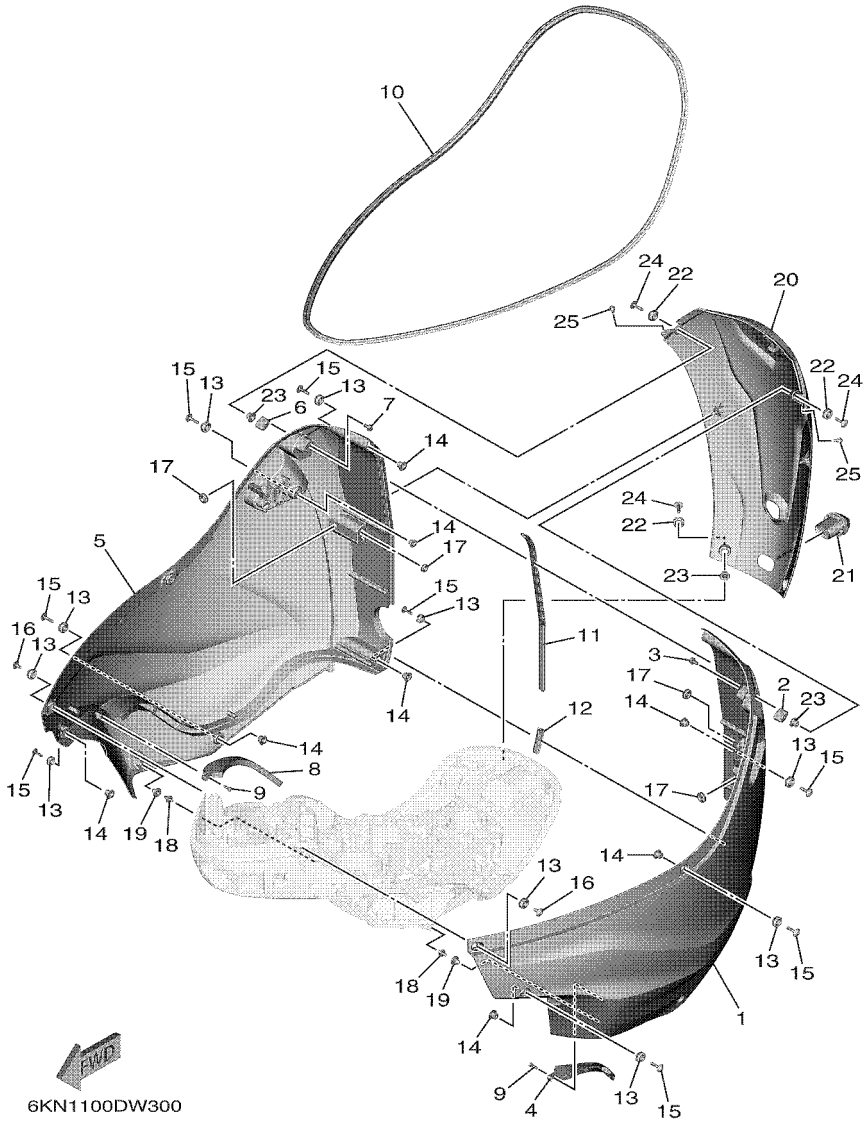

REF. NO.	PART NO. CODIGO Nº	DESCRIPTION DESCRIPCION	6KN4	6LB4	6KP4	6LC4		REMARKS OBSERVACIONES
25	90338–07012	PLUG TAPON	2	2	2	2		

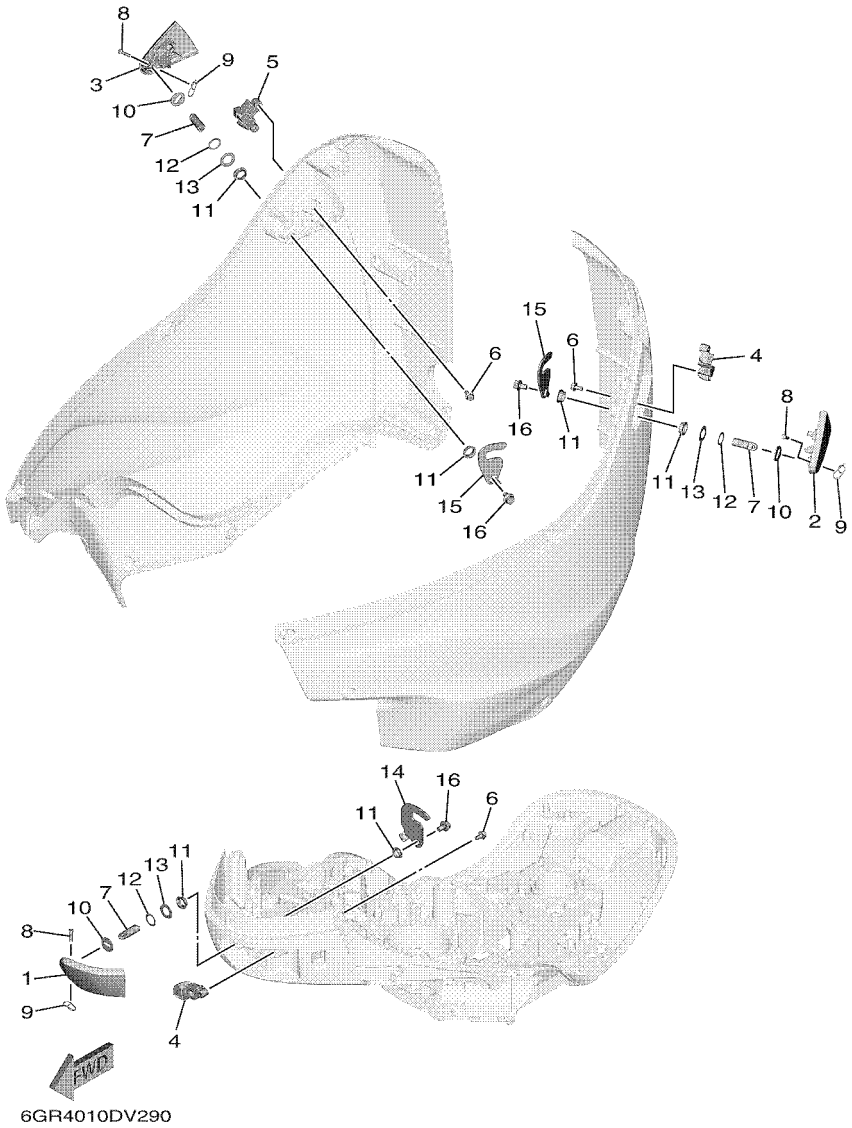

FIG. 31 BOTTOM COWLING 3 — CUBIERTA INFERIOR 3

REF. NO.	PART NO. CODIGO Nº	DESCRIPTION DESCRIPCION	6KN4	6LB4	6KP4	6LC4		REMARKS OBSERVACIONES
1	6GR–42815–00–8D	LEVER, CLAMP 1 PALANCA ABRAZADERA 1	1	1	1	1		UR GRAY UR GRAY
	6GR–42815–00–CE	LEVER, CLAMP 1 PALANCA ABRAZADERA 1	1		1			UR WHITE UR WHITE
2	6GR–42816–01–8D	LEVER, CLAMP 2 PALANCA ABRAZADERA 2	1	1	1	1		UR GRAY UR GRAY
	6GR–42816–01–CE	LEVER, CLAMP 2 PALANCA ABRAZADERA 2	1		1			UR WHITE UR WHITE
3	6GR–42817–01–8D	LEVER, CLAMP 3 PALANCA ABRAZADERA 3	1	1	1	1		UR GRAY UR GRAY
	6GR–42817–01–CE	LEVER, CLAMP 3 PALANCA ABRAZADERA 3	1		1			UR WHITE UR WHITE
4	6GR–42828–00	PLATE, CLAMP PLACA, GRAMPA	2	2	2	2		
5	6GR–42829–00	PLATE, CLAMP 2 PLACA, GRAMPA 2	1	1	1	1		
6	95D95–06012	BOLT, FLANGE DEEP RECESS CERROJO, REBORDE HUECO PROFUND	6	6	6	6		
7	6GR–42835–00	PIN, SET 1 PASADOR 1	3	3	3	3		
8	90240–05002	PIN, CLEVIS PASADOR CON HOYO	3	3	3	3		
9	68T–42835–00	PIN, SET 1 PASADOR 1	3	3	3	3		
10	6GR–42833–00	WASHER, PLAIN ARANDELA, PLANA	3	3	3	3		
11	90386–15M73	BUSH BUJE	6	6	6	6		
12	90206–15M18	WASHER, WAVE ARANDELA ONDULADA	3	3	3	3		
13	90201–156J2	WASHER, PLATE ARANDELA PLANA	3	3	3	3		
14	6GR–42818–00	LEVER, CLAMP 4 PALANCA, ABRAZADERA 4	1	1	1	1		
15	6GR–42819–00	LEVER, CLAMP 5 PALANCA ABRAZADERA 5	2	2	2	2		
16	95D95–08012	BOLT, FLANGE DEEP RECESS CERROJO, REBORDE HUECO PROFUND	3	3	3	3		

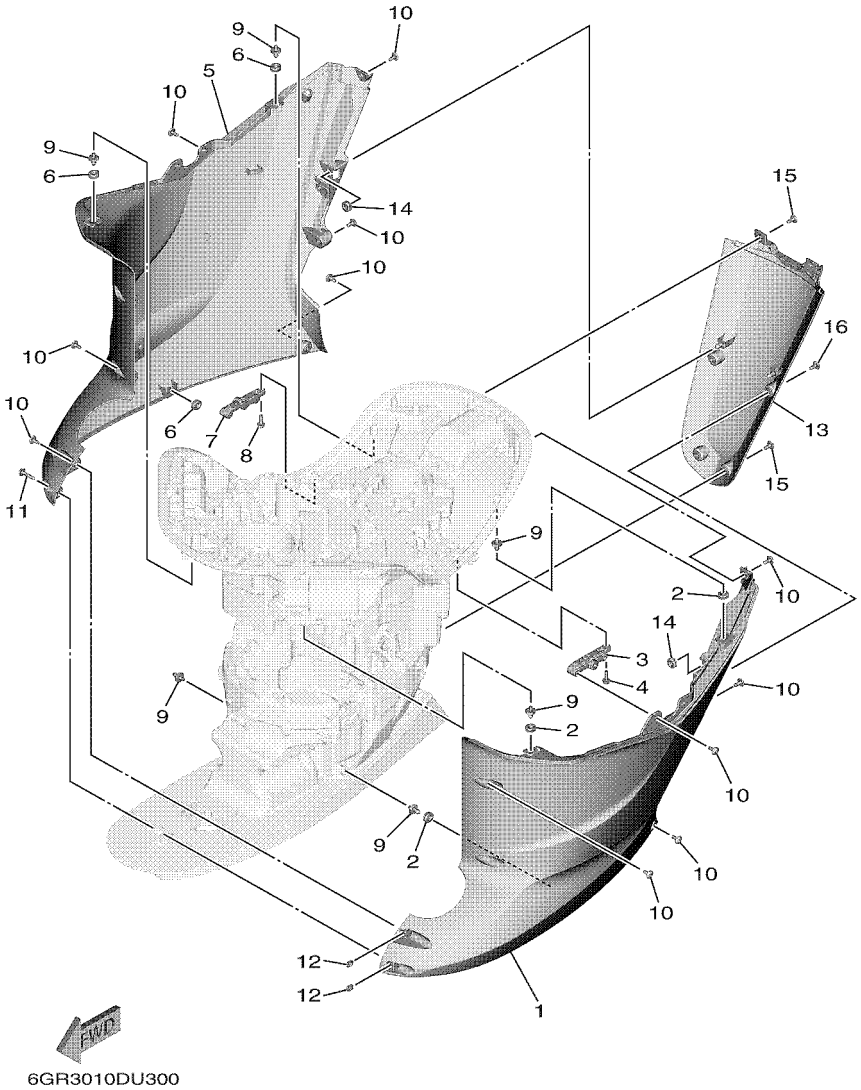

FIG. 32 BOTTOM COWLING 4 — CUBIERTA INFERIOR 4

REF. NO.	PART NO. CODIGO Nº	DESCRIPTION DESCRIPCION	6KN4	6LB4	6KP4	6LC4		REMARKS OBSERVACIONES
1	6GR–42740–00–8D	APRON COMPLETE 1 MANDIL COMPLETO 1	1	1	1	1		UR GRAY UR GRAY
	6GR–42740–00–CE	APRON COMPLETE 1 MANDIL COMPLETO 1	1		1			UR WHITE UR WHITE
2	90480–14M17	GROMMET TAPON	3	3	3	3		
3	6GR–42774–00–CA	STAY, APRON 1 BUJEDEL PIVOTE DE LA FLECHA	1	1	1	1		
4	95D95–06020	BOLT, FLANGE DEEP RECESS CERROJO, REBORDE HUECO PROFUND	2	2	2	2		
5	6GR–42770–00–8D	APRON COMPLETE 2 MANDIL COMPLETO 2	1	1	1	1		UR GRAY UR GRAY
	6GR–42770–00–CE	APRON COMPLETE 2 MANDIL COMPLETO 2	1		1			UR WHITE UR WHITE
6	90480–14M17	GROMMET TAPON	3	3	3	3		
7	6GR–42775–00–CA	STAY, APRON 2 BUJEDEL PIVOTE DE LA FLECHA	1	1	1	1		
8	95D95–06020	BOLT, FLANGE DEEP RECESS CERROJO, REBORDE HUECO PROFUND	2	2	2	2		
9	69J–42774–10	STAY, APRON 1 BUJEDEL PIVOTE DE LA FLECHA	6	6	6	6		
10	90111–06144	BOLT, HEXAGON SOCKET BUTTON TORNILLO	15	15	15	15		
11	90111–06142	BOLT, HEXAGON SOCKET BUTTON TORNILLO	1	1	1	1		
12	90173–06001	NUT, SQUARE TUERCA CUADRADA	2	2	2	2		
13	6GR–45141–00–8D	COVER, UPPER CASING CUBIERTA FUNDA SUPERIOR	1	1	1	1		UR GRAY UR GRAY
	6GR–45141–00–CE	COVER, UPPER CASING CUBIERTA FUNDA SUPERIOR	1		1			UR WHITE UR WHITE
14	90480–14M17	GROMMET TAPON	2	2	2	2		
15	90111–06144	BOLT, HEXAGON SOCKET BUTTON TORNILLO	4	4	4	4		
16	90111–06142	BOLT, HEXAGON SOCKET BUTTON TORNILLO	2	2	2	2		

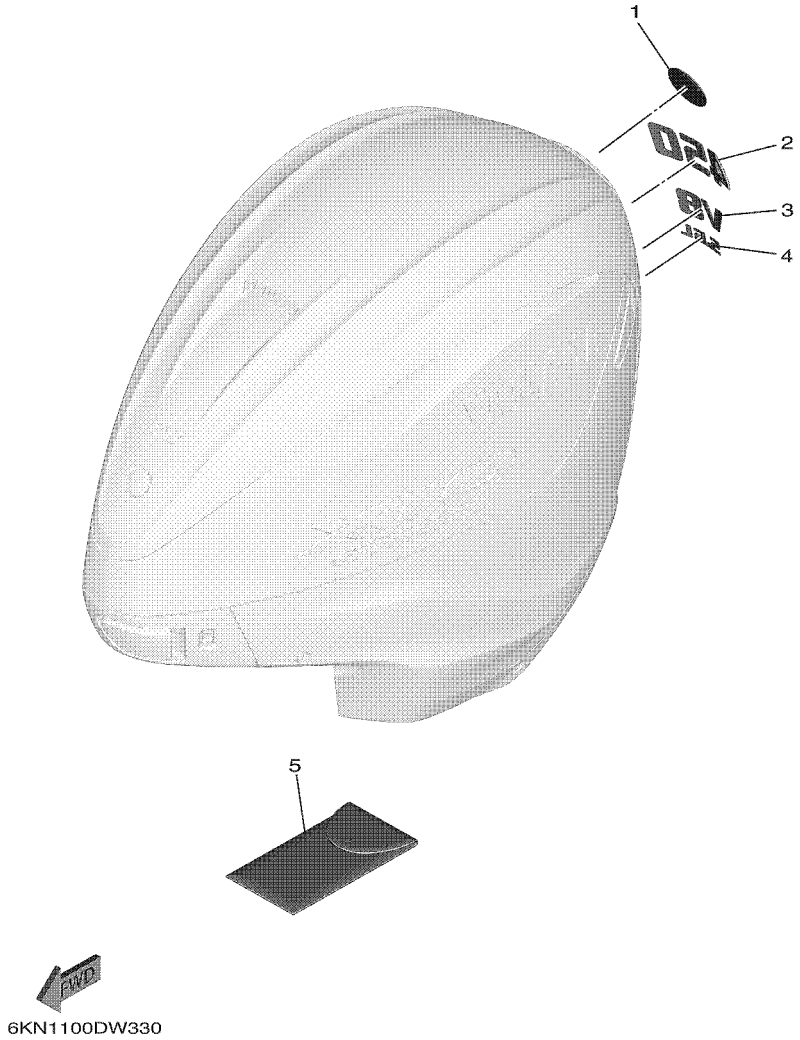

FIG. 33 GRAPHIC & TOOL CALCAMONIA

REF. NO.	PART NO. CODIGO Nº	DESCRIPTION DESCRIPCION	6KN4	6LB4	6KP4	6LC4		REMARKS OBSERVACIONES
1	6KN–42697–00	TUNING FORK MARK MARCA, YAMAHA	1	1	1	1		
2	6KN–4267A–00	GRAPHIC, REAR 2 CALCAMONIA TRASERA 2	1		1			
	6LB–4267A–00	GRAPHIC, REAR 2 CALCAMONIA TRASERA 2		1		1		
3	6GR–42678–00	GRAPHIC, REAR CALCAMONIA TRASERA	1	1	1	1		
4	6GR–42682–00	MARK, COWLING MARCA DE CUBIERTA	1	1	1	1		
5	6GR–28100–01	TOOL KIT JUEGO DE HERRAMIENTAS	1		1			FOR CAR FOR CAR
	6GR–28100–11	TOOL KIT JUEGO DE HERRAMIENTAS	1	1				EXCEPT FOR CAR EXCEPT FOR CAR

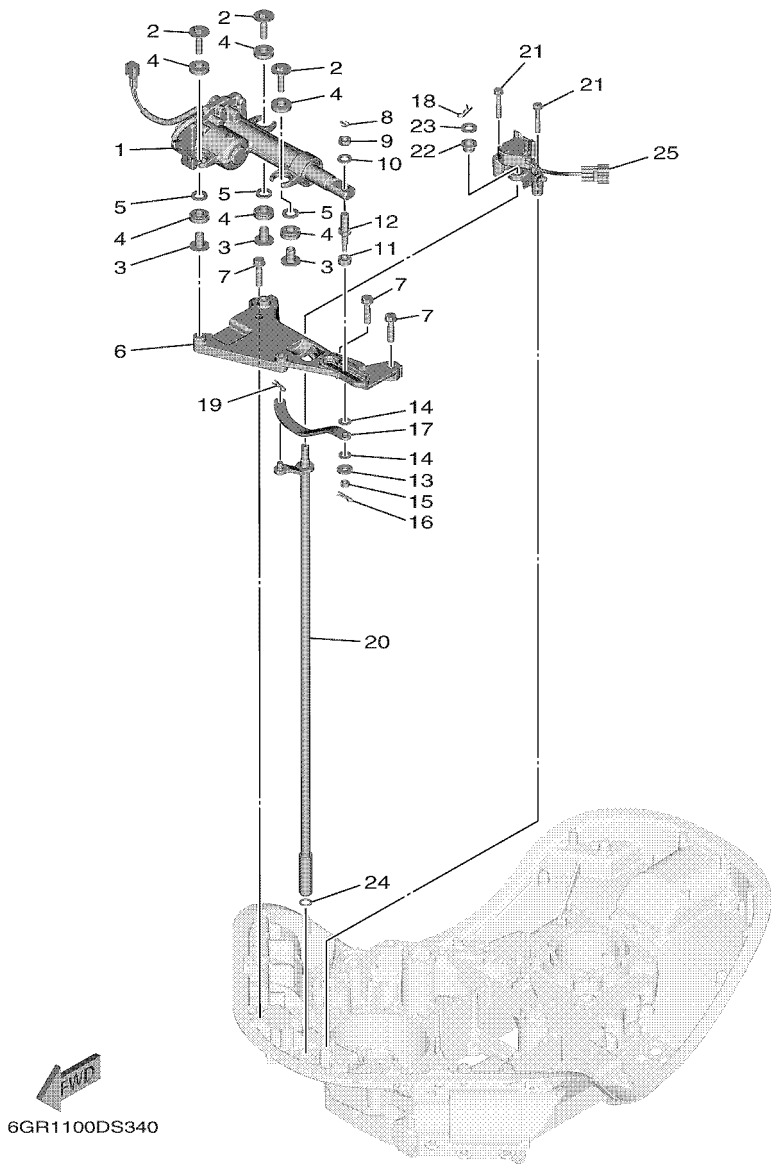

FIG. 34 CONTROL

CONTROL

REF. NO.	PART NO. CODIGO Nº	DESCRIPTION DESCRIPCION	6KN4	6LB4	6KP4	6LC4		REMARKS OBSERVACIONES
1	6GR–4820A–01	ACTUATOR UNIT UNIDAD DE ACTUADOR	1	1	1	1		
2	90119–08175	BOLT, WITH WASHER TORNILLO CON ARANDELA	3	3	3	3		
3	90387–08104	COLLAR ESPACIADOR	3	3	3	3		
4	6CE–85564–00	GROMMET ANILLO PROTECTOR	6	6	6	6		
5	90201–12064	WASHER, PLATE ARANDELA PLANA	3	3	3	3		
6	6GR–44117–00	BRACKET SOPORTE	1	1	1	1		
7	97E75–08535	BOLT, HEXAGON W/W DEEP RECESS TORNILLO HEXAGONAL CON RONDONA	3	3	3	3		
8	91490–20015	PIN. COTTER CHAVETA	1	1	1	1		
9	95380–10700	NUT TUERCA	1	1	1	1		
10	90201–10048	WASHER, PLATE ARANDELA PLANA	1	1	1	1		
11	6CE–44122–00	BUSHING, SHIFT ROD LEVER BUJE PALANCA VARILLA DE CAMBIO	1	1	1	1		
12	6GR–42195–00	PIN, JOINT 1 PASADOR DE CONECTOR	1	1	1	1		
13	90201–06068	WASHER, PLATE ARANDELA PLANA	1	1	1	1		
14	90202–08M41	WASHER, PLATE ARANDELA DE PLANA	2	2	2	2		
15	90185–06M07	NUT, SELF-LOCKING TUERCA AUTOBLOCANTE	1	1	1	1		
16	90468–18008	CLIP PRESILLA	1	1	1	1		
17	6GR–44121–00	LEVER, SHIFT ROD PALANCA VARILLA CAMBIOS	1	1	1	1		
18	90468–180A0	CLIP PRESILLA	1	1	1	1		
19	90468–18008	CLIP PRESILLA	1	1	1	1		
20	6GR–44120–01	HANDLE GEAR SHIFT ASSY MANIJA DE CAMBIO COMPL	1	1	1	1		
21	97E95–06540	BOLT, HEXAGON W/W DEEP RECESS TORNILLO HEXAGONAL CON RONDONA	2	2	2	2		
22	90386–12M61	BUSH BUJE	1	1	1	1		
23	90201–10081	WASHER, PLATE ARANDELA PLANA	1	1	1	1		
24	93210–11073	O-RING ANILLO O	1	1	1	1		
25	6GR–68303–00	SENSOR ASSY SENSOR COMP.	1	1	1	1		

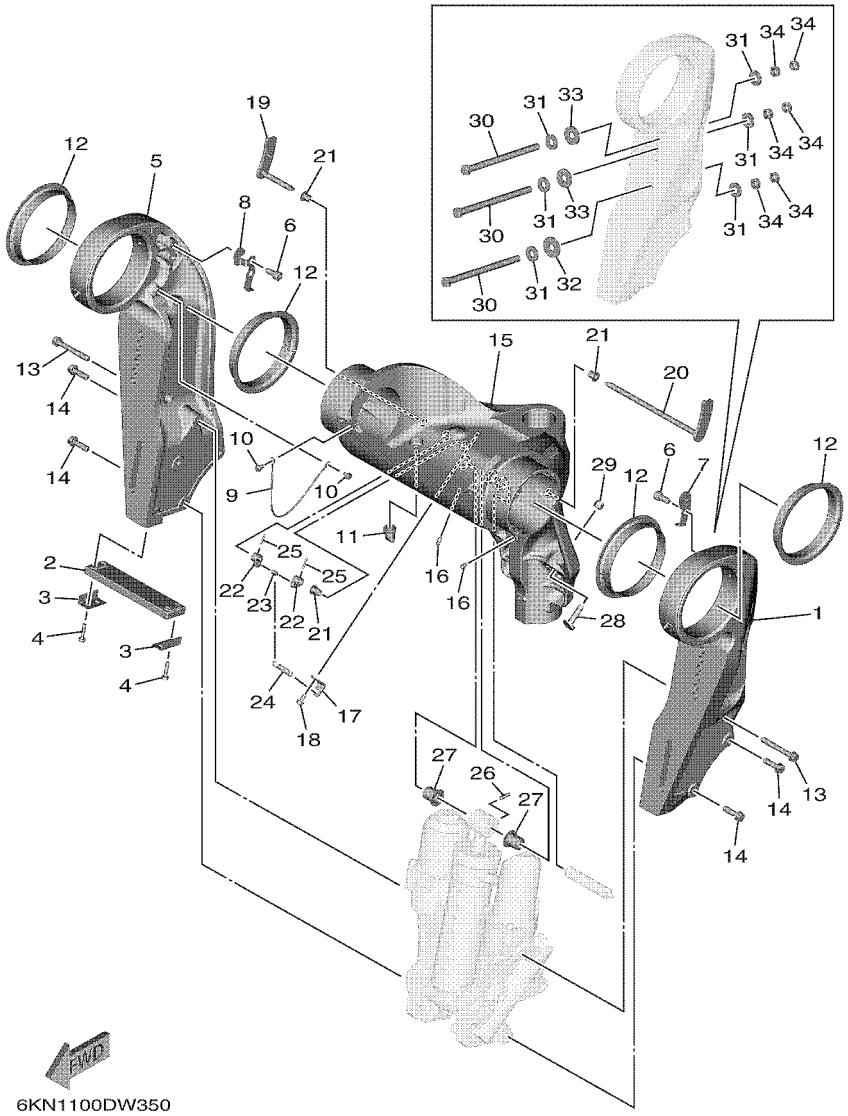

FIG. 35 BRACKET 1 SOPORTE 1

REF. NO.	PART NO. CODIGO Nº	DESCRIPTION DESCRIPCION	6KN4	6LB4	6KP4	6LC4		REMARKS OBSERVACIONES
1	6GR–4311A–00–8D	BRACKET, CLAMP 1, W/NIPPLE SOPORTE DE LA ABRAZADERA 1	1	1	1	1		UR GRAY UR GRAY
	6GR–4311A–00–CE	BRACKET, CLAMP 1, W/NIPPLE SOPORTE DE LA ABRAZADERA 1	1		1			UR WHITE UR WHITE
2	6AW–45251–00	ANODE CATODE	1	1	1	1		
3	6G5–44526–00	PLATE PLACA 1	2	2	2	2		
4	97E95–06530	BOLT, HEXAGON W/W DEEP RECESS TORNILLO HEXAGONAL CON RONDONA	4	4	4	4		
5	6GR–4311B–00–8D	BRACKET, CLAMP 2, W/NIPPLE SOPORTE DE LA ABRAZADERA 2	1	1	1	1		UR GRAY UR GRAY
	6GR–4311B–00–CE	BRACKET, CLAMP 2, W/NIPPLE SOPORTE DE LA ABRAZADERA 2	1		1			UR WHITE UR WHITE
6	91380–10020	BOLT PERNO	4	4	4	4		
7	6GR–4381E–00	BRACKET, 1 SOPORTE, 1	1	1	1	1		
8	6GR–4381F–00	BRACKET, 2 SOPORTE, 2	1	1	1	1		
9	6GR–82147–00	WIRE, LEAD 5 CABLE CONDUCTOR 5	1	1	1	1		
10	97E95–06510	BOLT, HEXAGON W/W DEEP RECESS TORNILLO HEXAGONAL CON RONDONA	2	2	2	2		
11	61A–42717–00	RUBBER, SEAL 2 GOMA	1	1	1	1		
12	6GR–43333–00	BUSH. , SWIVEL BRACKET BUSH. , SOPORTE GIRATORIO	4	4	4	4		
13	90119–10064	BOLT, WITH WASHER TORNILLO CON ARANDELA	2	2	2	2		
14	90119–10040	BOLT, WITH WASHER TORNILLO CON ARANDELA	6	6	6	6		
15	6GR–43311–02–8D	BRACKET, SWIVEL 1 SOPORTE GIRATORIO 1	1	1	1	1		UR GRAY UR GRAY
	6GR–43311–02–CE	BRACKET, SWIVEL 1 SOPORTE GIRATORIO 1	1		1			UR WHITE UR WHITE
16	93700–06002	NIPPLE, GREASE BOQUILLA DE ENGRASAR	3	3	3	3		
17	6GR–43144–00	HOOK, SPRING GANCHO	1	1	1	1		
18	95D95–06012	BOLT, FLANGE DEEP RECESS CERROJO, REBORDE HUECO PROFUND	1	1	1	1		
19	6GR–43181–00	LEVER, TILT STOP 1 PALANCA TOPE INCLINACION 1	1	1	1	1		
20	6GR–43185–00	LEVER, TILT STOP 2 PALANCA TOPE INCLINACION 2	1	1	1	1		
21	90386–10M16	BUSH BUJE	3	3	3	3		
22	6G5–43148–00	COLLAR, DISTANCE COLLAR	2	2	2	2		
23	90249–06M19	PIN PASADOR	1	1	1	1		
24	90506–16010	SPRING, TENSION RESORTE DE TENSION	1	1	1	1		

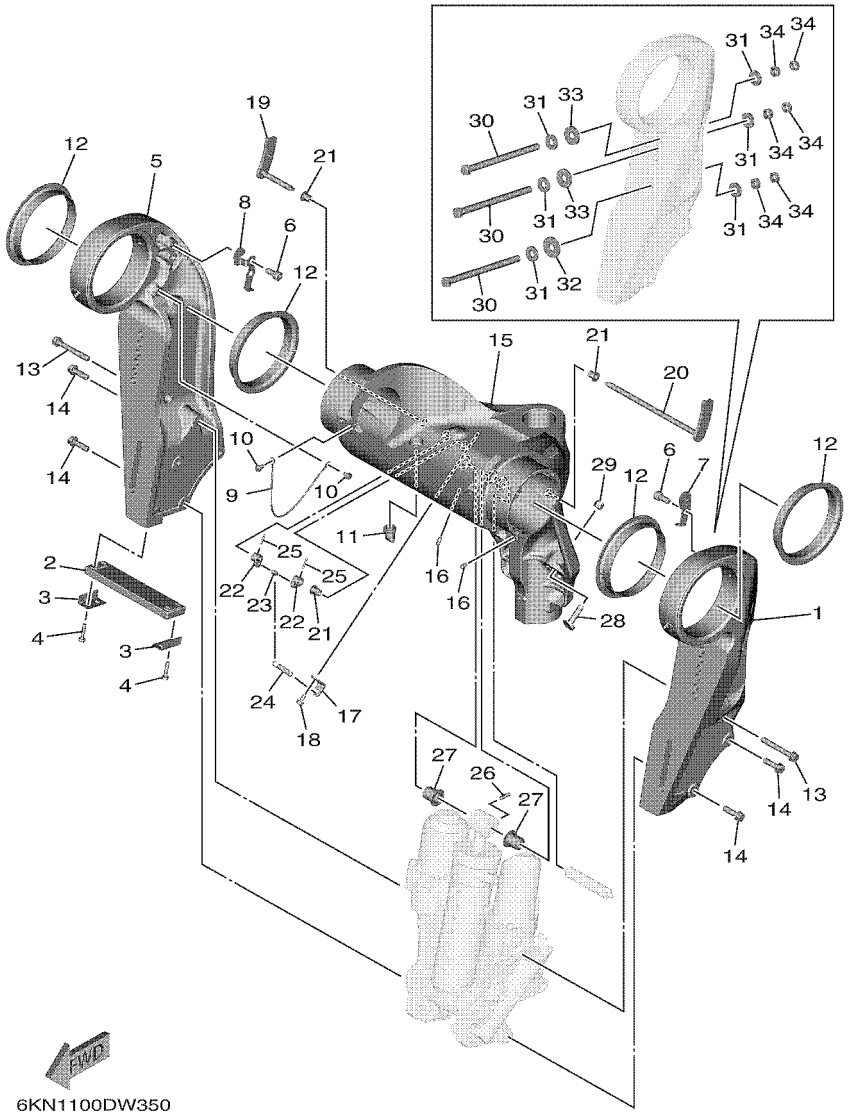

FIG. 35 BRACKET 1 SOPORTE 1

REF. NO.	PART NO. CODIGO Nº	DESCRIPTION DESCRIPCION	6KN4	6LB4	6KP4	6LC4		REMARKS OBSERVACIONES
25	91690–30020	PIN, SPRING PASADOR DE RESORTE	2	2	2	2		
26	91690–60022	PIN, SPRING PASADOR DE RESORTE	1	1	1	1		
27	90386–20002	BUSH BUJE	2	2	2	2		
28	6GR–43376–01	BOLT, THRUST RECEIVER TORNILLO RECEPTOR	2	2	2	2		
29	95780–10300	NUT, FLANGE TUERCA	2	2	2	2		
30	90101–12073	BOLT (180MM) TORNILLO (180MM)	6	6	6	6		
	90101–12072	BOLT (110MM) TORNILLO (110MM)	2	2	2	2		AP AP
	90101–12067	BOLT (150MM) TORNILLO (150MM)	2	2	2	2		AP AP
	90101–12068	BOLT (170MM) TORNILLO (170MM)	2	2	2	2		AP AP
	90101–12073	BOLT (180MM) TORNILLO (180MM)	2	2	2	2		AP AP
	90101–12074	BOLT (200MM) TORNILLO (200MM)	2	2	2	2		AP AP
	90101–12069	BOLT (210MM) TORNILLO (210MM)	2	2	2	2		AP AP
	90101–12070	BOLT (230MM) TORNILLO (230MM)	2	2	2	2		AP AP
31	90201–12060	WASHER, PLATE ARANDELA PLANA	12	12	12	12		
32	90201–12426	WASHER, PLATE ARANDELA PLANA	2	2	2	2		
33	90201–13M19	WASHER, PLATE ARANDELA PLANA	4	4	4	4		
34	95380–12600	NUT TUERCA	12	12	12	12		

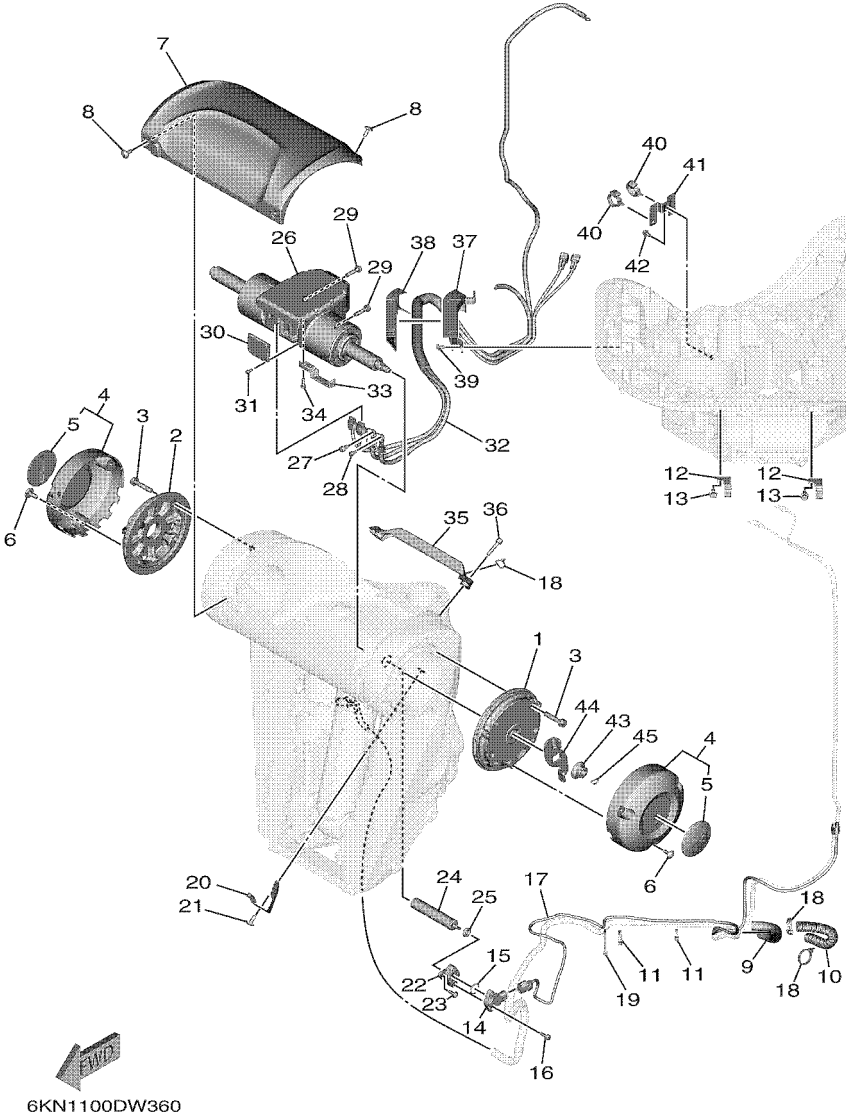

FIG. 36 BRACKET 2 — SOPORTE 2

REF. NO.	PART NO. CODIGO Nº	DESCRIPTION DESCRIPCION	6KN4	6LB4	6KP4	6LC4		REMARKS OBSERVACIONES
1	6GR–43341–00	COVER, SWIVEL SIDE 1 CUBIERTA, LADO GIRATORIO 1	1	1	1	1		
2	6GR–43342–00	COVER, SWIVEL SIDE 2 CUBIERTA, LADO GIRATORIO 2	1	1	1	1		
3	90119–08176	BOLT, WITH WASHER TORNILLO CON ARANDELA	8	8	8	8		
4	6GR–W436G–00–8D	SBW SIDE COVER ASSY SBW CUBIERTA LATERAL COMPLETA	2	2	2	2		UR GRAY UR GRAY
	6GR–W436G–00–CE	SBW SIDE COVER ASSY SBW CUBIERTA LATERAL COMPLETA	2		2			UR WHITE UR WHITE
5	6DA–42697–00	.TUNING FORK MARK .MARCA, YAMAHA	1	1	1	1		
6	90111–06144	BOLT, HEXAGON SOCKET BUTTON TORNILLO	6	6	6	6		
7	6GR–43318–00–8D	COVER CUBIERTA	1	1	1	1		UR GRAY UR GRAY
	6GR–43318–00–CE	COVER CUBIERTA	1		1			UR WHITE UR WHITE
8	90111–06144	BOLT, HEXAGON SOCKET BUTTON TORNILLO	4	4	4	4		
9	6GR–24864–00	TUBE TUBO	1	1	1	1		
10	6KN–24864–00	TUBE TUBO	1	1	1	1		
11	90465–11M10	CLAMP BRIDA	2	2	2	2		
12	90462–10033	CLAMP BRIDA	2	2	2	2		
13	95D95–06012	BOLT, FLANGE DEEP RECESS CERROJO, REBORDE HUECO PROFUND	2	2	2	2		
14	6GR–85887–00	SENSOR, ANGLE SENSOR DE PAR	1	1	1	1		
15	93210–17MF9	O-RING ANILLO O	1	1	1	1		
16	97595–05516	BOLT, WITH WASHER PERNO CON ARANDELA	2	2	2	2		
17	6GR–82553–00	EXTENSION, WIRE LEAD CABLE	1	1	1	1		
18	90464–36005	CLAMP BRIDA	3	3	3	3		
19	90464–55002	CLAMP BRIDA	1	1	1	1		
20	6GR–4381J–00	PLATE PLACA	1	1	1	1		
21	90111–06144	BOLT, HEXAGON SOCKET BUTTON TORNILLO	1	1	1	1		
22	6GR–4382A–00	ADAPTOR 1 ADAPTADOR 1	1	1	1	1		
23	90149–05044	SCREW TORNILLO DE REGLAJE	2	2	2	2		
24	6GR–43126–00	PIN, UPPER SHOCK MOUNT PASADOR DE AMORTIGUADOR SUPERI	1	1	1	1		
25	93210–06ME6	O-RING ANILLO O	1	1	1	1		

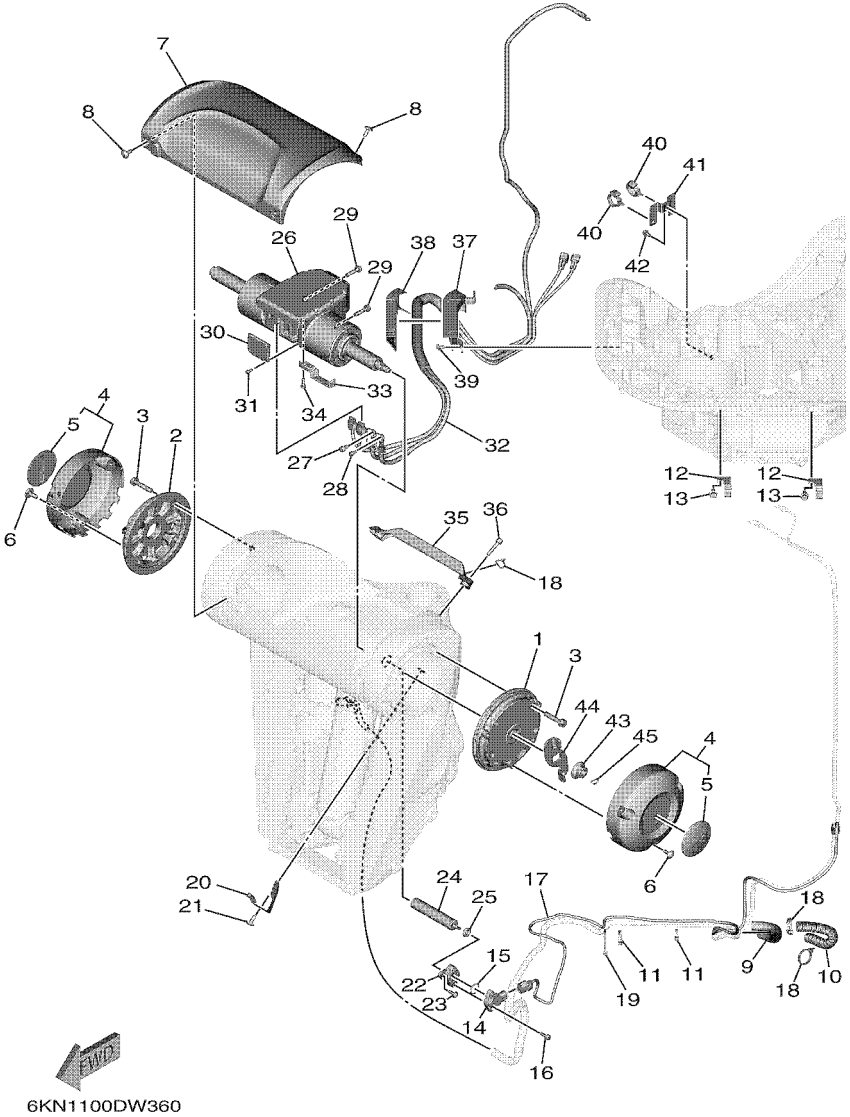

FIG. 36 BRACKET 2 SOPORTE 2

REF. NO.	PART NO. CODIGO Nº	DESCRIPTION DESCRIPCION	6KN4	6LB4	6KP4	6LC4		REMARKS OBSERVACIONES
26	6GR–42401–23	POWER STEERING CYLINDER ASSY MANEJO DE ENERGIA CILINDRO CPL	1	1	1	1		
27	6GR–44331–00	BOLT, 1 PERNO, 1	1	1	1	1		
28	6GR–44332–00	BOLT, 2 PERNO, 2	1	1	1	1		
29	97580–08535	BOLT, WITH WASHER PERNO CON ARANDELA	4	4	4	4		
30	6GR–42134–00	COVER CUBIERTA	1	1	1	1		
31	91380–04010	BOLT PERNO	4	4	4	4		
32	6GR–438A0–02	STEERING, WIRE HARNESS ASSY DIRECCION, ATALAJE DEL ALAMBRE	1	1	1	1		
33	6GR–48538–00	CLAMP, CABLE 1 GRAMPA DE CABLE	1	1	1	1		
34	97D95–06018	BOLT, HEXAGON DEEP RECESS TORNILLO HEXAGONAL	2	2	2	2		
35	6GR–47716–00	COVER CUBIERTA	1	1	1	1		
36	90110–06191	BOLT, HEXAGON SOCKET HEAD TORNILLO ALLEN	2	2	2	2		
37	6GR–43121–00	PROTECTOR PROTECTOR	1	1	1	1		
38	6GR–47445–00	PROTECTOR PROTECTOR	1	1	1	1		
39	95D95–06012	BOLT, FLANGE DEEP RECESS CERROJO, REBORDE HUECO PROFUND	2	2	2	2		
40	90464–12183	CLAMP BRIDA	2	2	2	2		
41	6GR–48539–00	CLAMP, CABLE 2 ABRAZADERA CABLE 2	1	1	1	1		
42	95D95–06012	BOLT, FLANGE DEEP RECESS CERROJO, REBORDE HUECO PROFUND	1	1	1	1		
43	90179–14009	NUT TUERCA	1	1	1	1		
44	6GR–43378–10	WASHER ARANDELA	1	1	1	1		
45	91490–20025	PIN. COTTER CHAVETA	1	1	1	1		

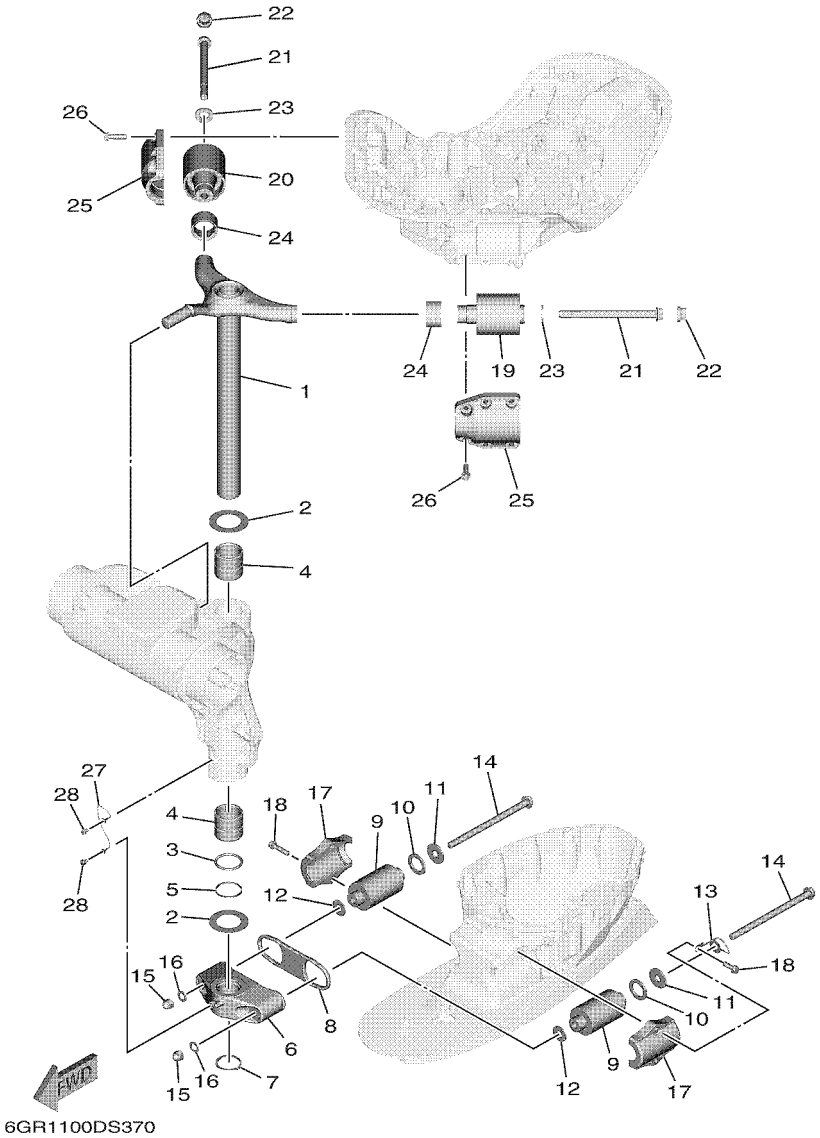

FIG. 37 BRACKET 3 — SOPORTE 3

REF. NO.	PART NO. CODIGO Nº	DESCRIPTION DESCRIPCION	6KN4	6LB4	6KP4	6LC4		REMARKS OBSERVACIONES
1	6GR–42510–01–8D	STEERING BRACKET ASSY SOPORTE DIRECCION COMPL.	1	1	1	1		
2	90201–51014	WASHER, PLATE ARANDELA PLANA	2	2	2	2		
3	93210–49003	O-RING ANILLO O	1	1	1	1		
4	90386–49001	BUSH BUJE	2	2	2	2		
5	90202–51001	WASHER, PLATE ARANDELA DE PLANA	1	1	1	1		
6	6GR–44551–00–CA	HOUSING, LOWER MOUNT RUBBER 1 CAJA AMORTIGUADOR INFERIOR HU	1	1	1	1		
7	93410–46099	CIRCLIP SEGURO	1	1	1	1		
8	6GR–44575–01	DAMPER, LOWER MOUNT RUBBER AMORTIGUADOR INFERIOR	1	1	1	1		
9	6AW–44555–00	MOUNT DAMPER, LOWER SIDE AMORTIGUADOR DE HULE LADO INFE	2	2	2	2		
10	90202–32M19	WASHER, PLATE ARANDELA DE PLANA	2	2	2	2		
11	90201–16M55	WASHER, PLATE ARANDELA PLANA	2	2	2	2		
12	90201–15M58	WASHER, PLATE ARANDELA PLANA	2	2	2	2		
13	6GR–82149–00	WIRE, LEAD 3 CABLE CONDUCTOR 3	1	1	1	1		
14	90105–14012	BOLT, FLANGE TORNILLO	2	2	2	2		
15	95380–14800	NUT TUERCA	2	2	2	2		
16	92995–14600	WASHER ARANDELA	2	2	2	2		
17	6AW–44552–00–CA	HOUSING, LOWER MOUNT RUBBER 2 CAJA AMORTIGUADOR INFERIOR HU	2	2	2	2		
18	90119–10024	BOLT, WITH WASHER TORNILLO CON ARANDELA	4	4	4	4		
19	6GR–44514–00	MOUNT DAMPER, UPPER SIDE AMORTIGUADOR LADO SUPERIOR	1	1	1	1		
20	6GR–44515–00	MOUNT RUBBER, UPPER SIDE AMORTIGUADOR LADO SUPERIOR	1	1	1	1		
21	90105–16004	BOLT, FLANGE TORNILLO	2	2	2	2		
22	6GR–44194–01	CAP TAPA	2	2	2	2		
23	90201–18030	WASHER, PLATE ARANDELA PLANA	2	2	2	2		
24	6GR–44533–00	DAMPER, UPPER MOUNT RUBBER AMORTIGUADOR SUPERIOR	2	2	2	2		
25	6GR–44511–00–CA	COVER, UPPER MOUNT CUBIERTA AMORTIGUADOR SUPERIOR	2	2	2	2		
26	90119–10058	BOLT, WITH WASHER TORNILLO CON ARANDELA	12	12	12	12		
27	6T4–82117–00	WIRE, LEAD CABLE CONDUCTOR	1	1	1	1		

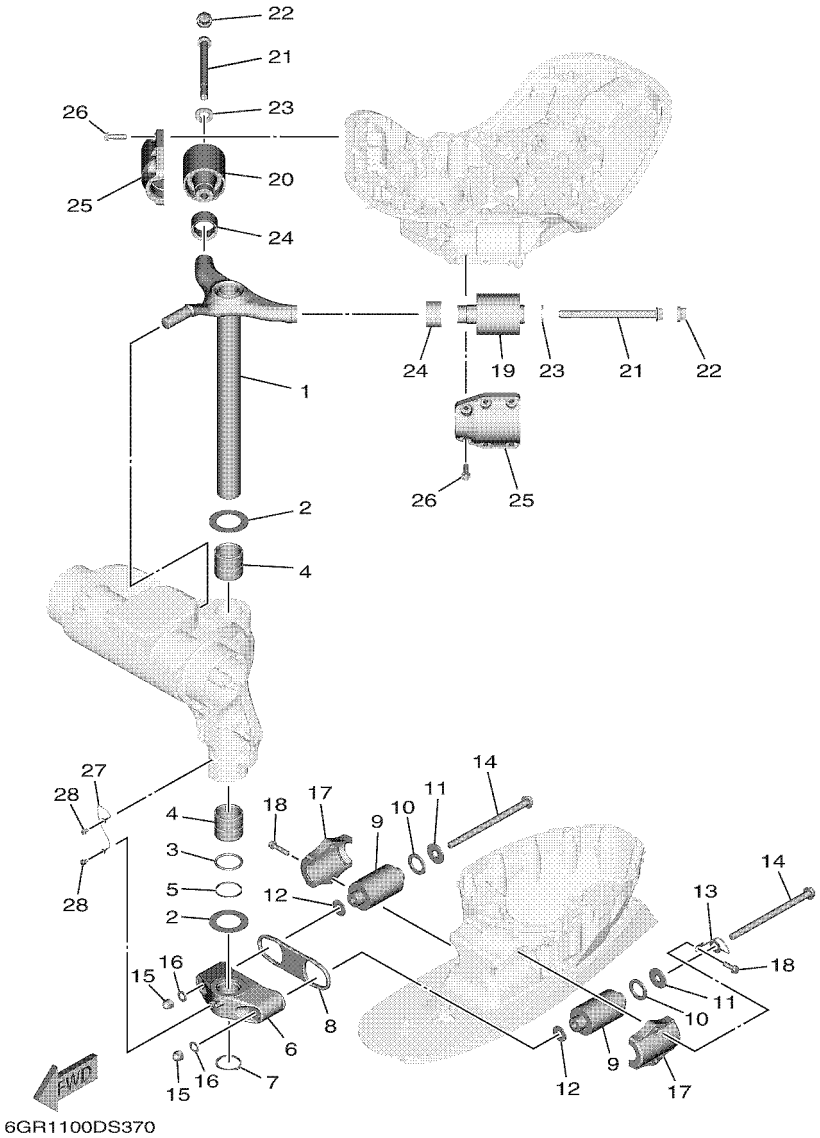

FIG. 37 BRACKET 3 — SOPORTE 3

REF. NO.	PART NO. CODIGO Nº	DESCRIPTION DESCRIPCION	6KN4	6LB4	6KP4	6LC4		REMARKS OBSERVACIONES
28	97E95–06510	BOLT, HEXAGON W/W DEEP RECESS TORNILLO HEXAGONAL CON RONDONA	2	2	2	2		

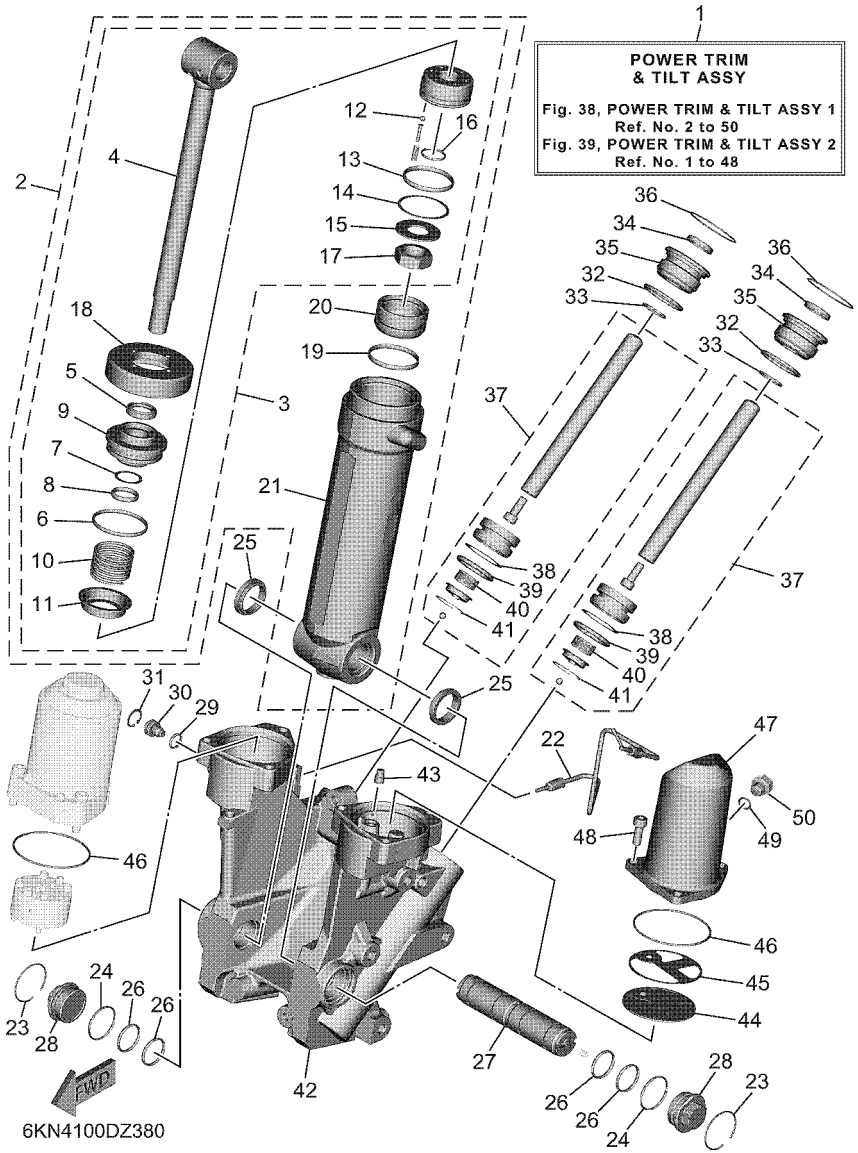

FIG. 38 POWER TRIM & TILT ASSY 1 — COMPONER Y PODER VARILLA 1

REF. NO.	PART NO. CODIGO Nº	DESCRIPTION DESCRIPCION	6KN4	6LB4	6KP4	6LC4		REMARKS OBSERVACIONES
1	6KN–43800–01	POWER TRIM & TILT ASSY ELEVADOR HIDRAULICO COMPL.	1	1	1	1		
2	6GR–43840–00	POWER TILT ASSY CONJUNTO COMPONER	1	1	1	1		
3	6GR–43810–00	.TILT PISTON SUB ASSY .ELEVADOR SUB-PISTON COMPL.	1	1	1	1		
4	6GR–43801–00	..ROD ..VALILLA COMPL INCLINACION	1	1	1	1		
5	6GR–43812–00	..SEAL, DUST ..SELLO DE POLVO	1	1	1	1		
6	93210–49046	..O-RING ..ANILLO O	1	1	1	1		
7	6GR–43872–00	..RING, BACK UP ..ANILLO	1	1	1	1		
8	6GR–43863–00	..O-RING ..ANILLO EN O 3	1	1	1	1		
9	6GR–43811–00	..SCREW, CYLINDER END ..TORNILLO CILINDRO EXTREMO	1	1	1	1		
10	69J–4384H–00	..SPRING ..RESORTE	1	1	1	1		
11	6GR–4382E–00	..ADAPTOR 2 ..ADAPTADOR 2	1	1	1	1		
12	93505–32038	..BALL ..BOLA	4	4	4	4		
13	93210–44006	..O-RING ..ANILLO O	1	1	1	1		
14	6GR–43871–00	..RING, BACK UP ..ANILLO	1	1	1	1		
15	90201–18029	..WASHER, PLATE ..ARANDELA PLANA	1	1	1	1		
16	93210–18397	..O-RING ..ANILLO O	1	1	1	1		
17	6GR–43654–00	..NUT 1 ..TUERCA 1	1	1	1	1		
18	6GR–43827–00	..RING SET ..ESFERA	1	1	1	1		
19	93210–44006	.O-RING .ANILLO O	1	1	1	1		
20	6GR–43814–00	.PISTON, FREE .PISTON LIBRE	1	1	1	1		
21	6GR–4380K–00	.CYLINDER, TILT SUB ASSY .CILINDRO, INCLINACION	1	1	1	1		
22	6GR–43835–00	PIPE TUBO 3	1	1	1	1		
23	93450–42110	CIRCLIP SEGURO	2	2	2	2		
24	6GR–43862–00	O-RING ANILLO EN O 2	2	2	2	2		
25	6GR–4388F–00	SPACER ESPACIADOR	2	2	2	2		
26	6GR–43861–00	O-RING ANILLO EN O 1	4	4	4	4		
27	6GR–43818–00	PIN, LOWER SHOCK MOUNT PASADOR AMORTIGUADOR INFERIOR	1	1	1	1		

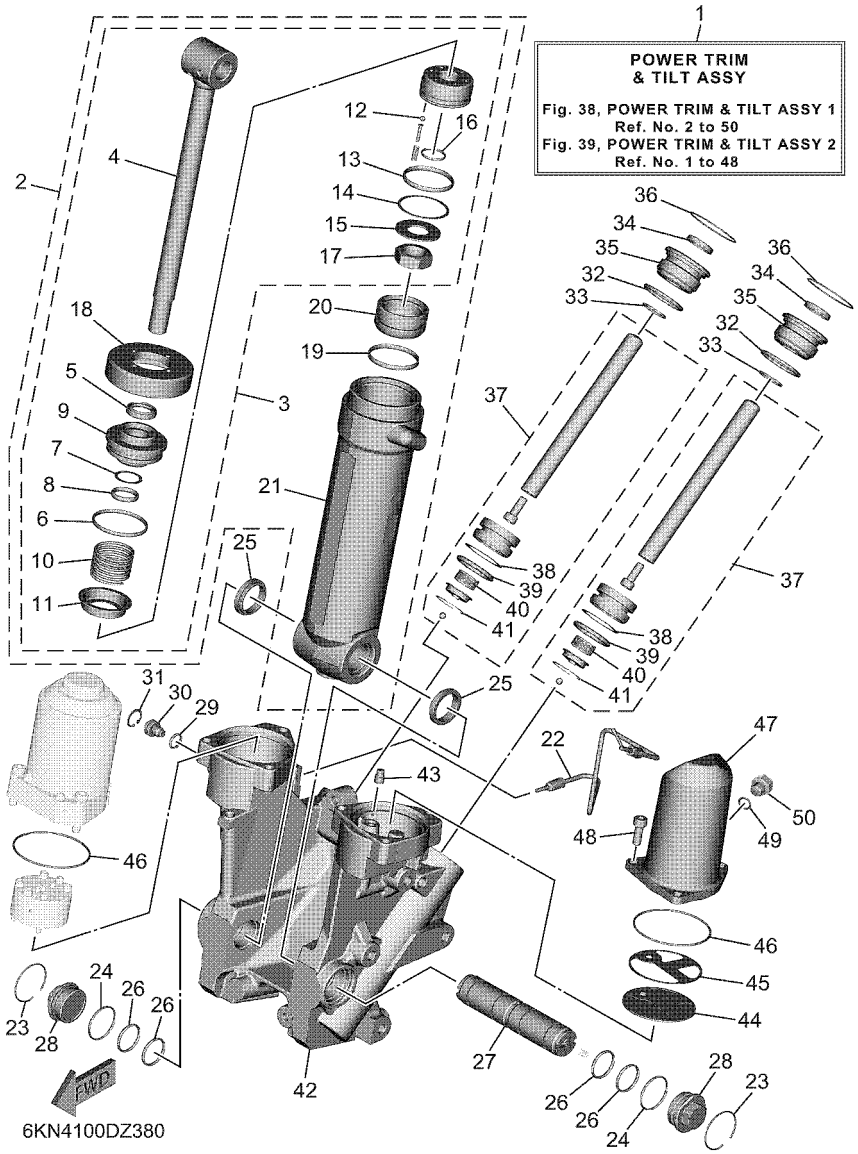

FIG. 38 POWER TRIM & TILT ASSY 1 — COMPONER Y PODER VARILLA 1

REF. NO.	PART NO. CODIGO Nº	DESCRIPTION DESCRIPCION	6KN4	6LB4	6KP4	6LC4		REMARKS OBSERVACIONES
28	6GR–22472–01	CAP, CASE TAPA DE CAJA	2	2	2	2		
29	93210–12327	O-RING ANILLO O	1	1	1	1		
30	6GR–43845–00	SCREW, MANUAL RELEASE TORNILLO DESCOPLO MANUAL	1	1	1	1		
31	61A–43876–01	RING, SNAP ANILLO	1	1	1	1		
32	61A–43861–00	O-RING ANILLO EN O 1	2	2	2	2		
33	93210–23587	O-RING ANILLO O	2	2	2	2		
34	6KN–43812–00	SEAL, DUST SELLO DE POLVO	2	2	2	2		
35	6KN–43821–00	SCREW, TRIM CYLINDER END TORNILLO CILINDRO EXTREMO	2	2	2	2		
36	6KN–25415–00	CIRCLIP PRESILLA CIRCULAR	2	2	2	2		
37	6KN–43820–00	TRIM PISTON SUB ASSY ELEVADOR PISTON COMPL.	2	2	2	2		
38	61A–43874–00	.RING, BACK UP .ANILLO	1	1	1	1		
39	61A–43864–00	.O-RING .ANILLO EN O 4	1	1	1	1		
40	61A–4384H–10	.SPRING .RESORTE	1	1	1	1		
41	61A–43875–10	.RING, SNAP .ANILLO	1	1	1	1		
42	6KN–4380L–01	HOUSING, TRIM & TILT SUB ASSY CAJA, INCLINACION Y ADRNO	1	1	1	1		
43	6GR–4388H–00	PLUG TAPON	1	1	1	1		
44	69J–43817–00	FILTER 2 FIELTRO 2	1	1	1	1		
45	69J–4388F–00	SPACER ESPACIADOR	1	1	1	1		
46	93210–66001	O-RING ANILLO O	2	2	2	2		
47	6KN–43828–00	BODY, RESERVOIR CUERPO DEPOSITO	1	1	1	1		
48	69J–43888–00	BOLT, SOCKET TORNILLO ENCASTRE	3	3	3	3		
49	93210–09165	O-RING ANILLO O	1	1	1	1		
50	6EK–43829–00	PLUG, RESERVOIR TAPON DEPOSITO	1	1	1	1		

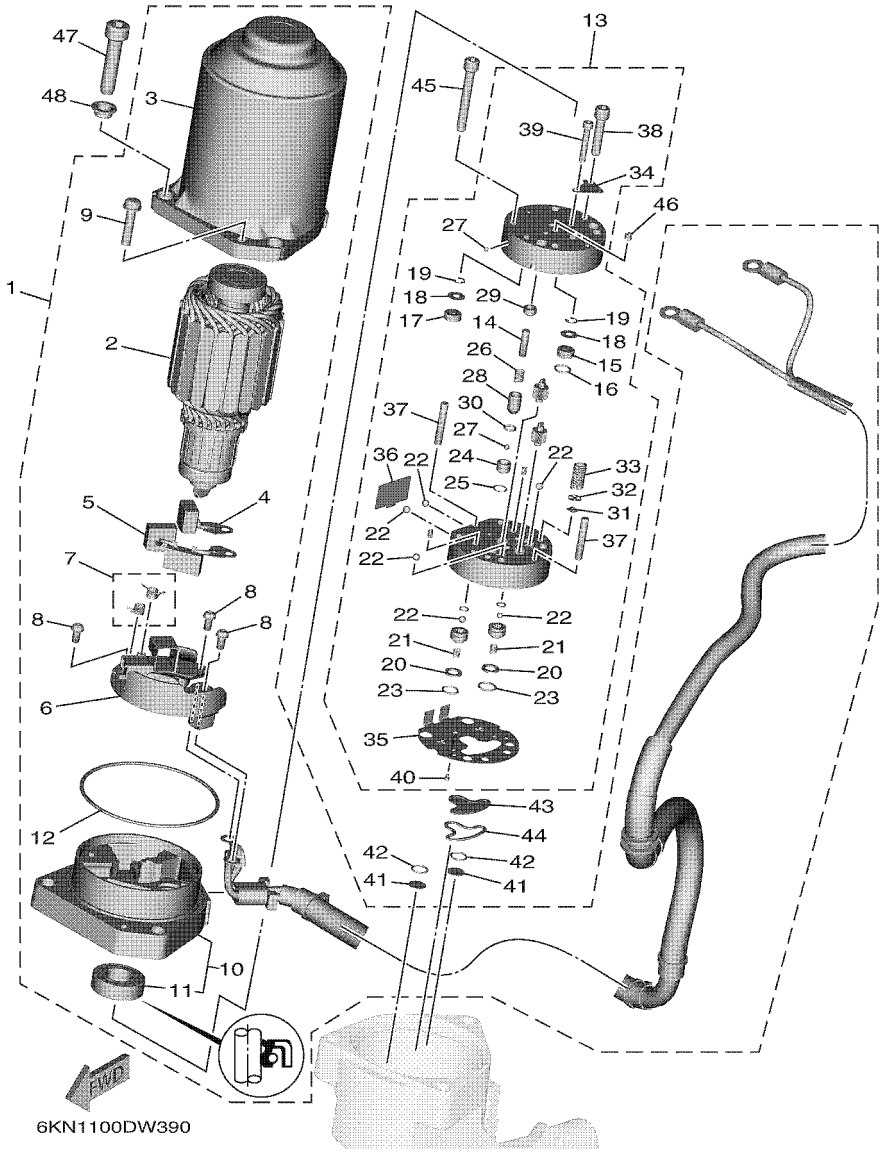

FIG. 39 POWER TRIM & TILT ASSY 2 — COMPONER Y PODER VARILLA 2

REF. NO.	PART NO. CODIGO Nº	DESCRIPTION DESCRIPCION	6KN4	6LB4	6KP4	6LC4		REMARKS OBSERVACIONES
1	6KN–43880–00	MOTOR ASSY MOTOR COMPL.	1	1	1	1		
2	6GR–43805–00	.ARMATURE ASSY .INDUCIDO COMPL.	1	1	1	1		
3	6GR–43804–00	.STATOR ASSY .ESTATOR COMPL	1	1	1	1		
4	6GR–43892–00	.BRUSH 2 .ESCOBILLA 2	1	1	1	1		
5	6GR–82181–00	.CIRCUIT BREAKER COMP. .RUPTOR DE CIRCUITO COMPL	1	1	1	1		
6	6GR–4380F–00	.PLATE, BRUSH HOLDER .PLACA	1	1	1	1		
7	6GR–4386K–00	.SPRING, BRUSH .RESORTE, ESCOBILLA	1	1	1	1		
8	97602–04310	.SCREW, PAN HEAD WITH WASHER .TORNILLO CON RONDONA	4	4	4	4		
9	67C–43879–10	.SCREW, WITH WASHER .TORNILLO CON RONDANA	2	2	2	2		
10	6KN–43881–00	.FRAME, END .CUADRO EXTERMO	1	1	1	1		
11	6GR–43882–01	..OIL SEAL ..SELLO ACEITE	1	1	1	1		
12	6GR–43864–01	.O-RING .ANILLO EN O 4	1	1	1	1		
13	6GR–43830–00	GEAR PUMP ASSY ENGRANAJE BOMBA COMPL.	1	1	1	1		
14	93603–08072	.PIN, DOWEL .PASADOR DE CLAVIJA	1	1	1	1		
15	6CJ–43841–00	.PISTON, SHUTTLE .PISTON	1	1	1	1		
16	6H1–43883–00	.O-RING .ANILLO EN O 10	1	1	1	1		
17	6CJ–4384M–00	.PISTON, SHUTTLE 2 .PISTON 2	1	1	1	1		
18	69A–4384F–00	.SEAL, MAIN VALVE .ASIENTO	2	2	2	2		
19	99002–03600	.CIRCLIP .PRESILLA REDONDA	2	2	2	2		
20	6C6–4387G–00	.WASHER .ARANDELA	2	2	2	2		
21	6C6–43853–00	.SPRING, MAIN VALVE .RESORTE	2	2	2	2		
22	93505–32038	.BALL .BOLA	6	6	6	6		
23	69J–4389J–00	.O-RING .ANILLO O	2	2	2	2		
24	6GR–43851–00	.SEAT, RELIEF VALVE .ASIENTO VALVULA DE DESCARGA	1	1	1	1		
25	93210–064A5	.O-RING .ANILLO O	1	1	1	1		
26	6C5–43855–10	.SPRING, UP RELIEF .RESORTE SEGURIDAD SUPERIOR	1	1	1	1		
27	93501–08001	.BALL .BOLA	2	2	2	2		

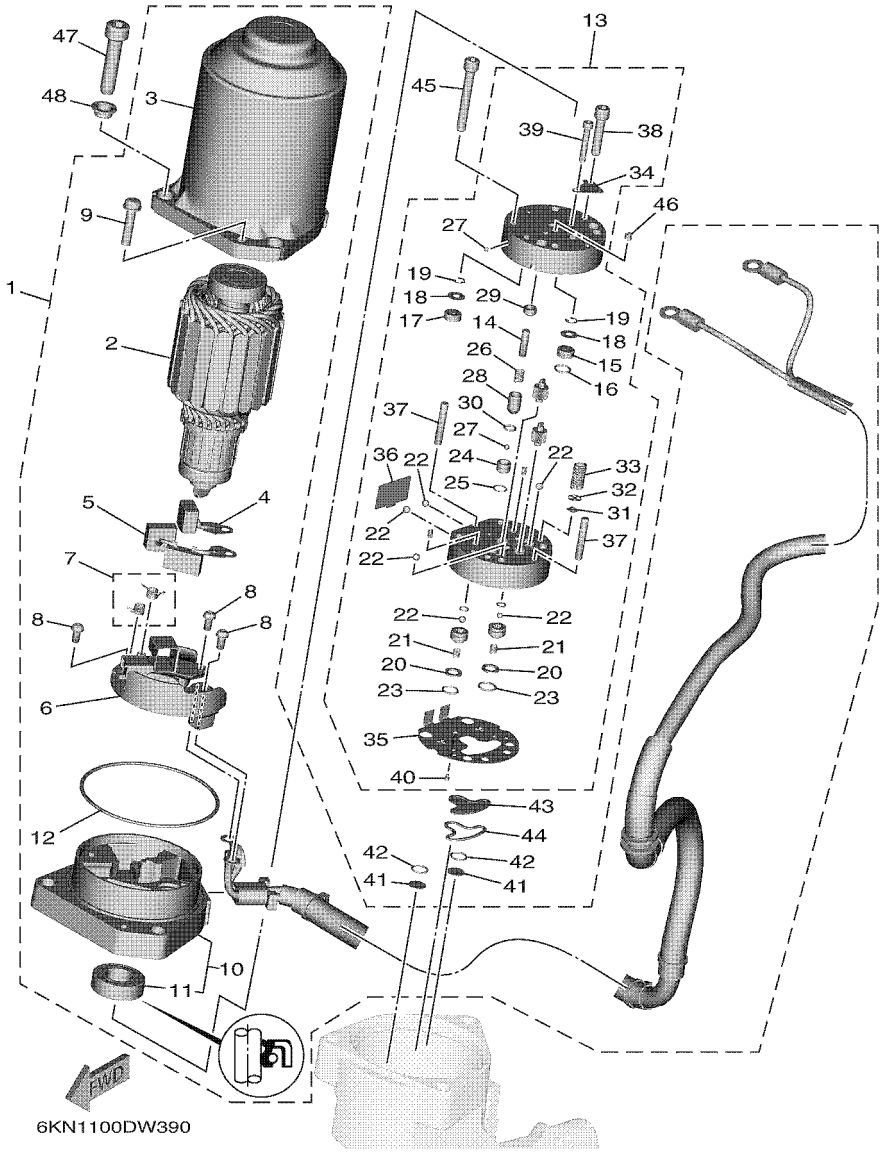

FIG. 39 POWER TRIM & TILT ASSY 2 — COMPONER Y PODER VARILLA 2

REF. NO.	PART NO. CODIGO Nº	DESCRIPTION DESCRIPCION	6KN4	6LB4	6KP4	6LC4		REMARKS OBSERVACIONES
28	6D8–43844–00	.PIN, VALVE SUPPORT .PASADOR VALVULA SOPORTE	1	1	1	1		
29	6D8–43843–00	.SCREW, VALVE LOCK .TORNILLO	1	1	1	1		
30	93210–04N51	.O-RING .ANILLO O	1	1	1	1		
31	6H1–4384G–11	.SEAL, RELIEF VALVE .ASIENTO	1	1	1	1		
32	6H1–43844–10	.PIN, VALVE SUPPORT .PASADOR VALVULA SOPORTE	1	1	1	1		
33	6GR–43856–00	.SPRING, DOWN RELIEF .RESORTE SEGURIDAD	1	1	1	1		
34	6D8–4382L–00	.CAP, RELIEF VALVE .TAPA	1	1	1	1		
35	6GR–43895–00	.SEAT, RELIEF VALVE .ASIENTO	1	1	1	1		
36	6C5–43854–00	.SPRING, MANUAL RELEASE .RESORTE DESCOPLO MANUAL	1	1	1	1		
37	93604–26256	.PIN, DOWEL .PASADOR DE CLAVIJA	2	2	2	2		
38	91318–05030	.BOLT .TORNILLO	2	2	2	2		
39	91318–03025	.BOLT .TORNILLO	2	2	2	2		
40	91318–03005	.BOLT .TORNILLO	1	1	1	1		
41	6C6–43817–00	FILTER 2 FIELTRO 2	2	2	2	2		
42	69J–4389J–00	O-RING ANILLO O	2	2	2	2		
43	6C5–43816–00	FILTER 1 FIELTRO 1	1	1	1	1		
44	6C5–4380G–00	PLATE PLACA	1	1	1	1		
45	91318–05045	BOLT TORNILLO	4	4	4	4		
46	69J–43831–00	CONNECTOR, SHAFT CONEXION EJE	1	1	1	1		
47	90110–08M05	BOLT, HEXAGON SOCKET HEAD TORNILLO ALLEN	3	3	3	3		
48	6GR–23113–00	COLLAR COLLAR	3	3	3	3		

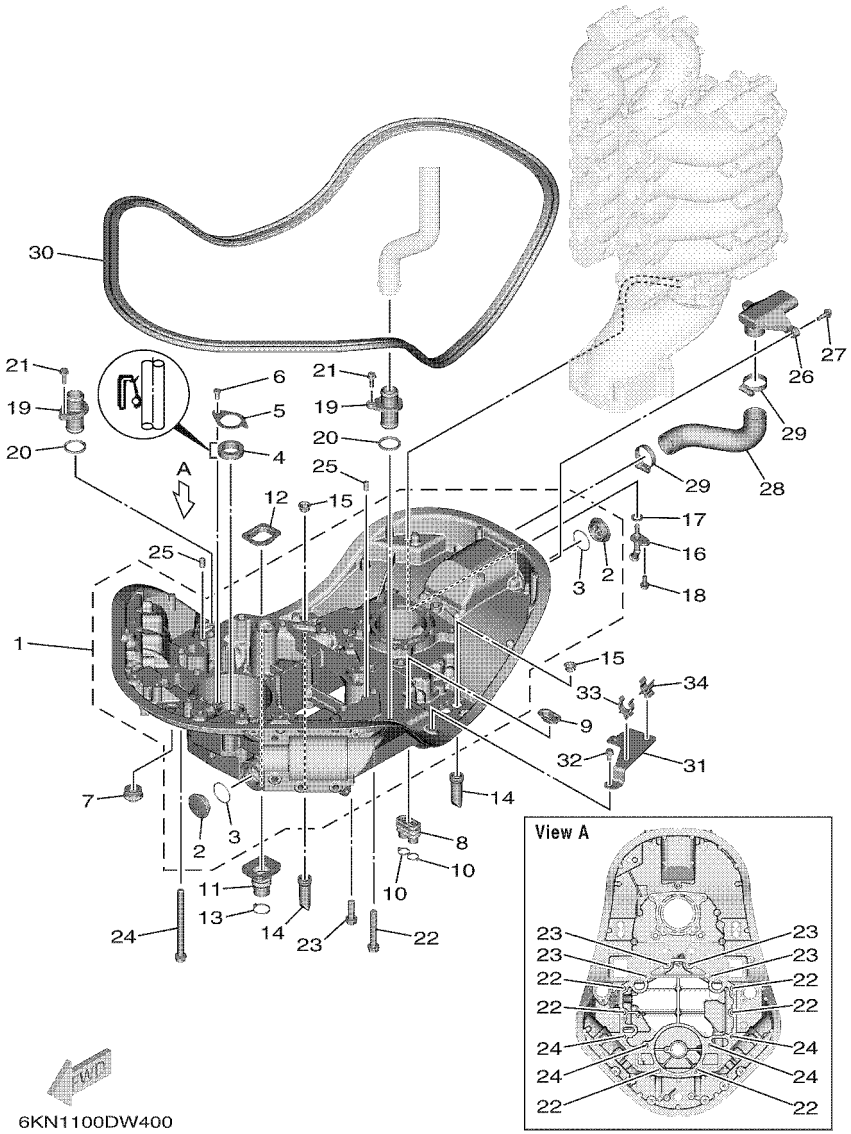

FIG. 40 UPPER CASING 1 — FUNDA SUPERIOR 1

REF. NO.	PART NO. CODIGO Nº	DESCRIPTION DESCRIPCION	6KN4	6LB4	6KP4	6LC4		REMARKS OBSERVACIONES
1	6GR–41137–00	GUIDE, EXHAUST GUIA DE ESCAPE	1	1	1	1		
2	90340–32011	.PLUG, STRAIGHT SCREW .TORNILLO, DE DRENAJE	2	2	2	2		
3	93210–32172	.O-RING .ANILLO O	2	2	2	2		
4	93102–26004	OIL SEAL SELLO ACEITE	1	1	1	1		
5	6GR–41297–00	WASHER, 1 ARANDELA 1	1	1	1	1		
6	97D95–06012	BOLT, HEXAGON DEEP RECESS TORNILLO HEXAGONAL	1	1	1	1		
7	6AW–42724–01	GROMMET TAPON	1	1	1	1		
8	6H1–42726–22	GROMMET TAPON	2	2	2	2		
9	6BG–42384–00	SEAL, CAP SELLO DE TAPA	2	2	2	2		
10	90465–11M10	CLAMP BRIDA	4	4	4	4		
11	6GR–42724–01	GROMMET TAPON	1	1	1	1		
12	6GR–42384–00	SEAL, CAP SELLO DE TAPA	1	1	1	1		
13	90465–11M59	CLAMP BRIDA	1	1	1	1		
14	6DA–42717–01	RUBBER, SEAL 2 GOMA	4	4	4	4		
15	6DA–42384–00	SEAL, CAP SELLO DE TAPA	4	4	4	4		
16	6GR–44391–00	NIPPLE, HOSE NIPLE MANGUERA	1	1	1	1		
17	60V–42747–10	PAD COJIN	1	1	1	1		
18	95D95–06016	BOLT, FLANGE DEEP RECESS CERROJO, REBORDE HUECO PROFUND	1	1	1	1		
19	6GR–12584–00	JOINT, HOSE 3 CONECTOR DE MANGUERA 3	2	2	2	2		
20	6GR–44366–01	DAMPER, WATER SEAL 2 GOMA DEL SELLO DE AGUA 2	2	2	2	2		
21	95D95–06020	BOLT, FLANGE DEEP RECESS CERROJO, REBORDE HUECO PROFUND	2	2	2	2		
22	97E75–10570	BOLT, HEXAGON W/W DEEP RECESS TORNILLO HEXAGONAL CON RONDONA	6	6	6	6		
23	90119–10040	BOLT, WITH WASHER TORNILLO CON ARANDELA	4	4	4	4		
24	90119–10075	BOLT, WITH WASHER TORNILLO CON ARANDELA	4	4	4	4		
25	93608–16M16	PIN, DOWEL PASADOR DE CLAVIJA	2	2	2	2		
26	6GR–14753–00	SILENCER, EXHAUST SILENCIADOR DE ESCAPE	1	1	1	1		
27	95D95–06020	BOLT, FLANGE DEEP RECESS CERROJO, REBORDE HUECO PROFUND	2	2	2	2		

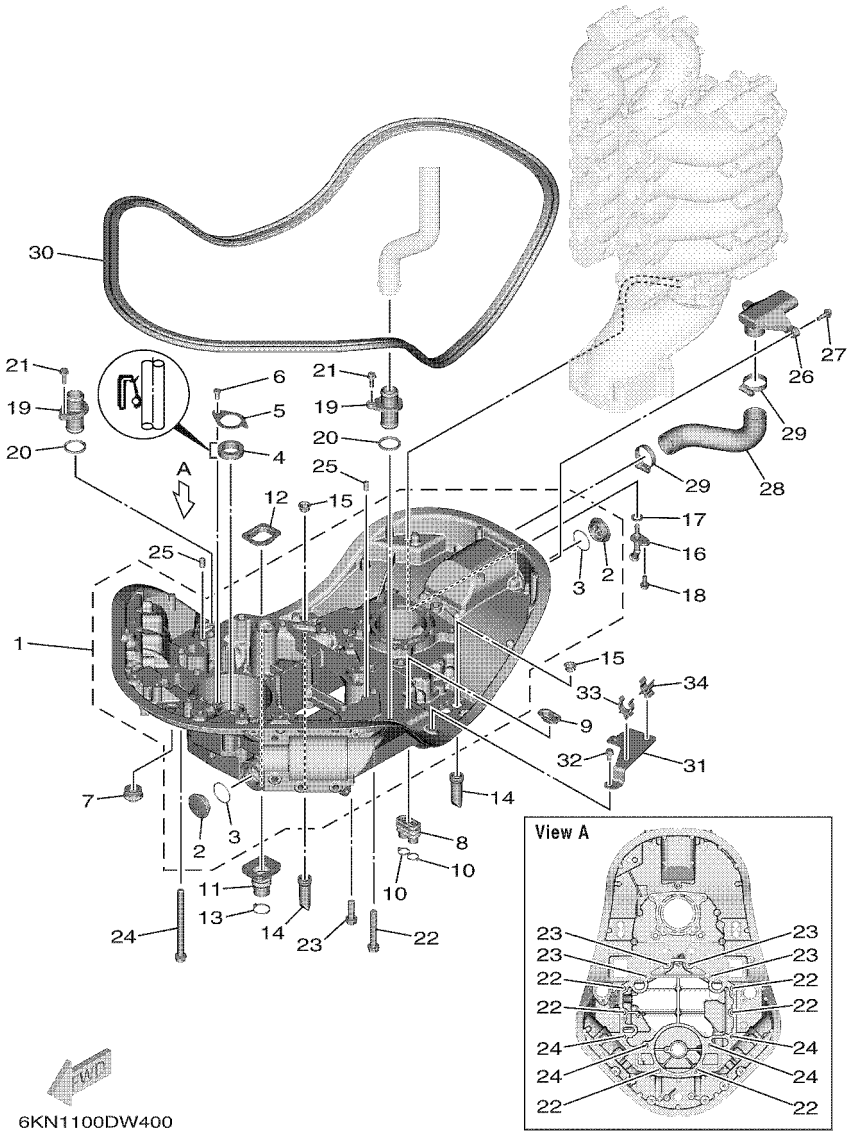

FIG. 40 UPPER CASING 1 — FUNDA SUPERIOR 1

REF. NO.	PART NO. CODIGO Nº	DESCRIPTION DESCRIPCION	6KN4	6LB4	6KP4	6LC4		REMARKS OBSERVACIONES
28	6GR–45135–00	PIPE TUBO 1	1	1	1	1		
29	90450–35003	HOSE CLAMP ASSY BRIDA, MANGUERA	2	2	2	2		
30	6GR–42716–00	RUBBER SEAL 1 SELLO DE GOMA 1	1	1	1	1		
31	6GR–82398–00	PLATE 3 PLACA 3	1	1	1	1		
32	95D95–06012	BOLT, FLANGE DEEP RECESS CERROJO, REBORDE HUECO PROFUND	2	2	2	2		
33	90464–19M45	CLAMP BRIDA	1	1	1	1		
34	90464–12015	CLAMP BRIDA	1	1	1	1		

FIG. 41 UPPER CASING 2 — FUNDA SUPERIOR 2

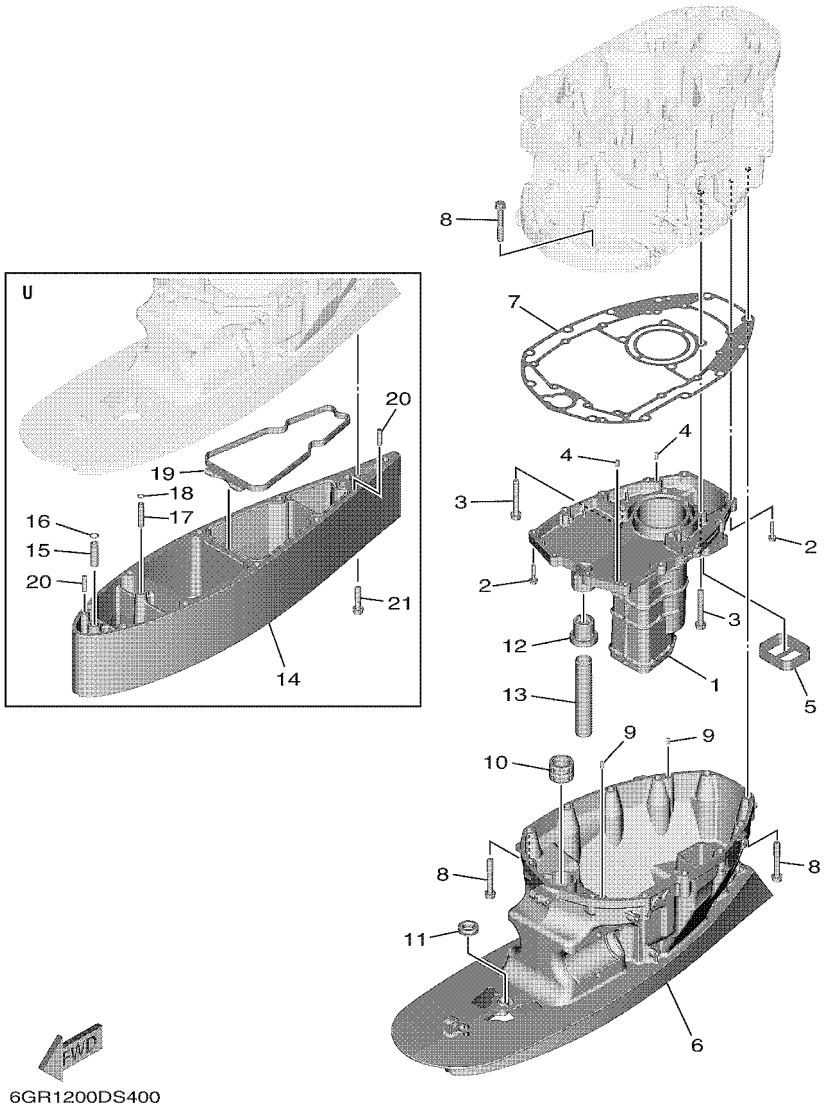

REF. NO.	PART NO. CODIGO Nº	DESCRIPTION DESCRIPCION	6KN4	6LB4	6KP4	6LC4		REMARKS OBSERVACIONES
1	6GR–14711–01	MUFFLER 1 SILENCIADOR 1	1	1	1	1		
2	95D95–06030	BOLT, FLANGE DEEP RECESS CERROJO, REBORDE HUECO PROFUND	12	12	12	12		
3	97E75–10570	BOLT, HEXAGON W/W DEEP RECESS TORNILLO HEXAGONAL CON RONDONA	4	4	4	4		
4	93606–12019	PIN, DOWEL PASADOR DE CLAVIJA	2	2	2	2		
5	6GR–45127–00	SEAL SELLO DE GOMA	1	1	1	1		
6	6GR–45111–00–8D	CASING, UPPER CAJA SUPERIOR	1	1	1	1		UR GRAY UR GRAY
	6GR–45111–00–CE	CASING, UPPER CAJA SUPERIOR	1		1			UR WHITE UR WHITE
7	6GR–45113–00	GASKET, UPPER CASING EMPAQUE	1	1	1	1		
8	97E75–10570	BOLT, HEXAGON W/W DEEP RECESS TORNILLO HEXAGONAL CON RONDONA	12	12	12	12		
9	93606–12019	PIN, DOWEL PASADOR DE CLAVIJA	2	2	2	2		
10	6GR–45318–00	BUSHING, DRIVE SHAFT BUJE, EJE DE MANDO	1	1	1	1		
11	6GR–44521–00	SEAL SELLO DE GOMA	1	1	1	1		
12	6GR–44367–01	DAMPER, WATER SEAL 3 GOMA DEL SELLO DE AGUA 3	1	1	1	1		
13	90440–27005	PIPE TUBO	1	1	1	1		UR X(25.2") UR X(25.2")
	90440–27006	PIPE TUBO	1	1	1	1		UR U(30.2") UR U(30.2")
14	6GR–45211–00–8D	EXTENSION EXTENSION	1	1	1	1		UR GRAY, U(30.2") UR GRAY, U(30.2")
	6GR–45211–00–CE	EXTENSION EXTENSION	1		1			UR WHITE,U(30.2") UR WHITE,U(30.2")
15	6GR–45398–00	NIPPLE, 1 NIPLE, 1	1	1	1	1		U(30.2") U(30.2")
16	93210–10010	O-RING ANILLO O	1	1	1	1		U(30.2") U(30.2")
17	6GR–45399–00	NIPPLE, 2 NIPLE, 2	1	1	1	1		U(30.2") U(30.2")
18	93210–07100	O-RING ANILLO O	1	1	1	1		U(30.2") U(30.2")
19	6GR–45375–01	DAMPER, SEAL GOMA DE SELLO	1	1	1	1		U(30.2") U(30.2")
20	99480–08030	PIN PASADOR	2	2	2	2		U(30.2") U(30.2")
21	90119–10024	BOLT, WITH WASHER TORNILLO CON ARANDELA	1	1	1	1		U(30.2") U(30.2")

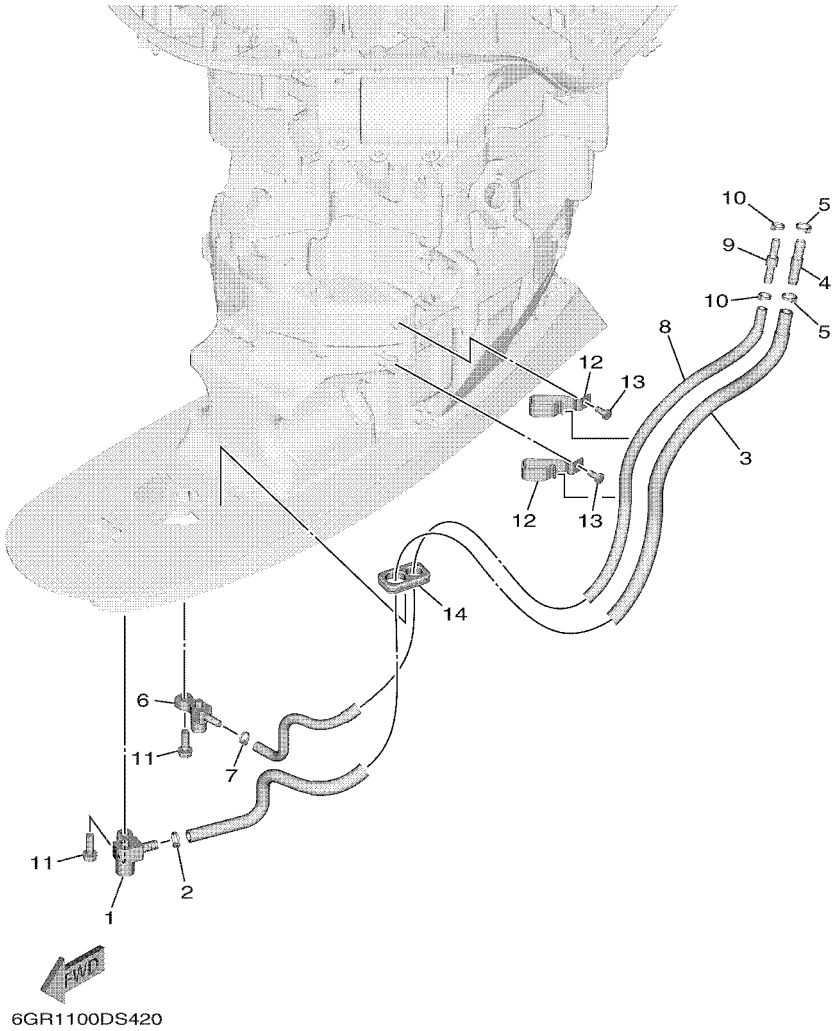

FIG. 42 UPPER CASING 3 — FUNDA SUPERIOR 4

REF. NO.	PART NO. CODIGO Nº	DESCRIPTION DESCRIPCION	6KN4	6LB4	6KP4	6LC4		REMARKS OBSERVACIONES
1	6GR–45368–00	JOINT, HOSE 1 CONECTOR DE MANGUERA 1	1	1	1	1		
2	90465–11M10	CLAMP BRIDA	1	1	1	1		
3	6GR–4383K–00	HOSE, OIL 1 MANGUERA DE ACEITE 1	1	1	1	1		
4	6AW–42785–00	PIPE TUBO	1	1	1	1		
5	90465–11M10	CLAMP BRIDA	2	2	2	2		
6	6GR–45369–00	JOINT, HOSE 2 CONECTOR DE MANGUERA 2	1	1	1	1		
7	90465–11M10	CLAMP BRIDA	1	1	1	1		
8	6GR–2318F–00	HOSE, AIR MANGUERA AIRE	1	1	1	1		
9	6E5–24379–00	PIPE, JOINT 4 TUBO DE UNION 4	1	1	1	1		
10	90465–11M10	CLAMP BRIDA	2	2	2	2		
11	97E95–08525	BOLT, HEXAGON W/W DEEP RECESS TORNILLO HEXAGONAL CON RONDONA	2	2	2	2		
12	6GR–12491–00	CLAMP 1 GRAMPA 1	2	2	2	2		
13	97D95–06012	BOLT, HEXAGON DEEP RECESS TORNILLO HEXAGONAL	2	2	2	2		
14	6GR–45159–01	DAMPER SELLO DE GOMA	1	1	1	1		

FIG. 43 OIL PAN

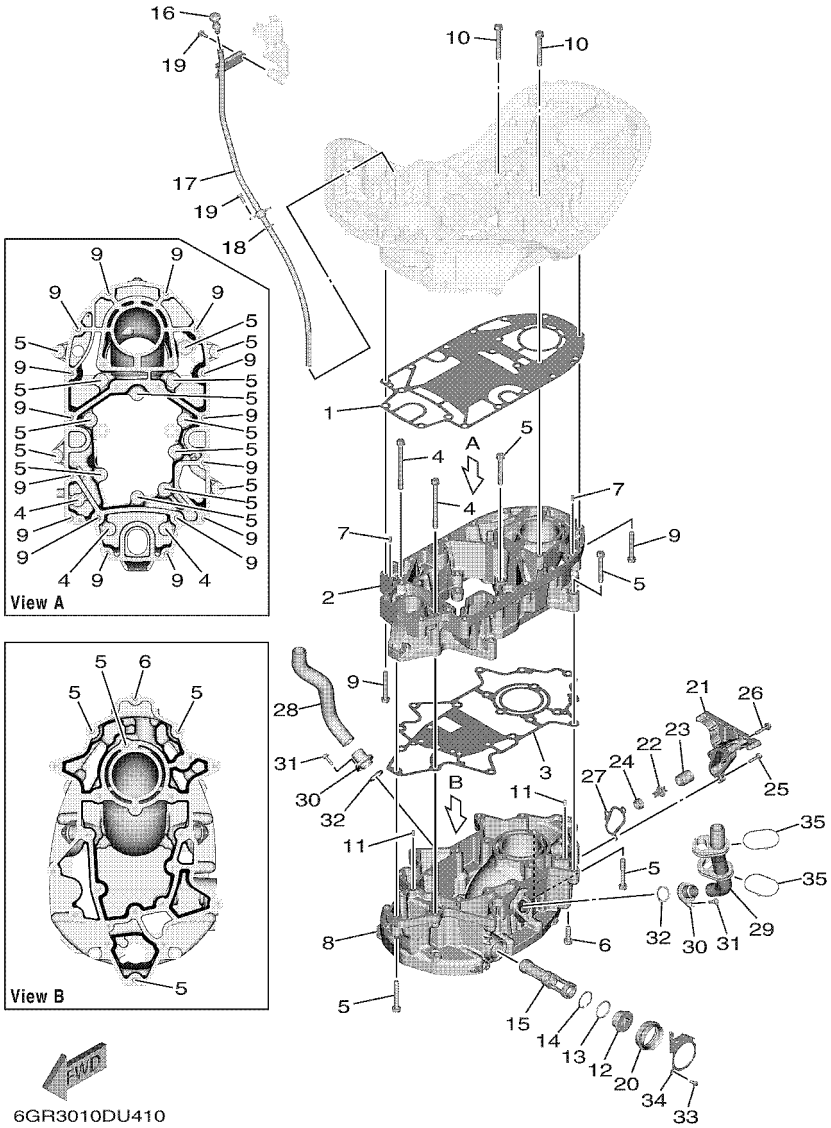

OIL PAN

REF. NO.	PART NO. CODIGO Nº	DESCRIPTION DESCRIPCION	6KN4	6LB4	6KP4	6LC4		REMARKS OBSERVACIONES
1	6GR–15312–01	GASKET, OIL PAN EMPAQ BANDEJA DE ACEITE	1	1	1	1		
2	6GR–1531B–01	OIL PAN 2 BANDEJA DE ACEITE 2	1	1	1	1		
3	6GR–1531C–01	GASKET, OIL PAN 2 EMPAQ BANDEJA DE ACEITE 2	1	1	1	1		
4	90119–10074	BOLT, WITH WASHER TORNILLO CON ARANDELA	3	3	3	3		
5	97E75–10570	BOLT, HEXAGON W/W DEEP RECESS TORNILLO HEXAGONAL CON RONDONA	18	18	18	18		
6	90119–10040	BOLT, WITH WASHER TORNILLO CON ARANDELA	1	1	1	1		
7	93606–12019	PIN, DOWEL PASADOR DE CLAVIJA	2	2	2	2		
8	6GR–15311–01	OIL PAN BANDEJA DE ACEITE	1	1	1	1		
9	97E75–10570	BOLT, HEXAGON W/W DEEP RECESS TORNILLO HEXAGONAL CON RONDONA	16	16	16	16		
10	97E75–10580	BOLT, HEXAGON W/W DEEP RECESS TORNILLO HEXAGONAL CON RONDONA	4	4	4	4		
11	93606–12019	PIN, DOWEL PASADOR DE CLAVIJA	2	2	2	2		
12	6GR–15351–00	PLUG,DRAIN 1 TAPON DE DRENAJE	1	1	1	1		
13	93210–34633	O-RING ANILLO O	1	1	1	1		
14	93420–36M01	CIRCLIP SEGURO	1	1	1	1		
15	6GR–13411–00	STRAINER, OIL FILTRO DE ACEITE	1	1	1	1		
16	6GR–15362–00	PLUG, OIL LEVEL TAPON DEL NIVEL DE ACEITE	1	1	1	1		
17	6GR–15377–00	GUIDE, INLET GUIA DE ENTRADA	1	1	1	1		
18	93210–19MJ3	O-RING ANILLO O	1	1	1	1		
19	95D95–06016	BOLT, FLANGE DEEP RECESS CERROJO, REBORDE HUECO PROFUND	3	3	3	3		
20	6GR–15316–01	DAMPER 1 AMORTIGUADOR 1	1	1	1	1		
21	6GR–1246A–00	COVER 1 CUBIERTA 1	1	1	1	1		
22	6G5–12416–00	VALVE, PRESSURE CONTROL VALVULA DE CONTROL DE PRESION	1	1	1	1		
23	90501–200A2	SPRING, COMPRESSION RESORTE DE COMPRESION	1	1	1	1		
24	90480–20M05	GROMMET TAPON	1	1	1	1		
25	95D95–06025	BOLT, FLANGE DEEP RECESS CERROJO, REBORDE HUECO PROFUND	1	1	1	1		
26	95D95–06040	BOLT, FLANGE DEEP RECESS CERROJO, REBORDE HUECO PROFUND	2	2	2	2		
27	6EK–12435–A0	GASKET EMPAQUE	1	1	1	1		

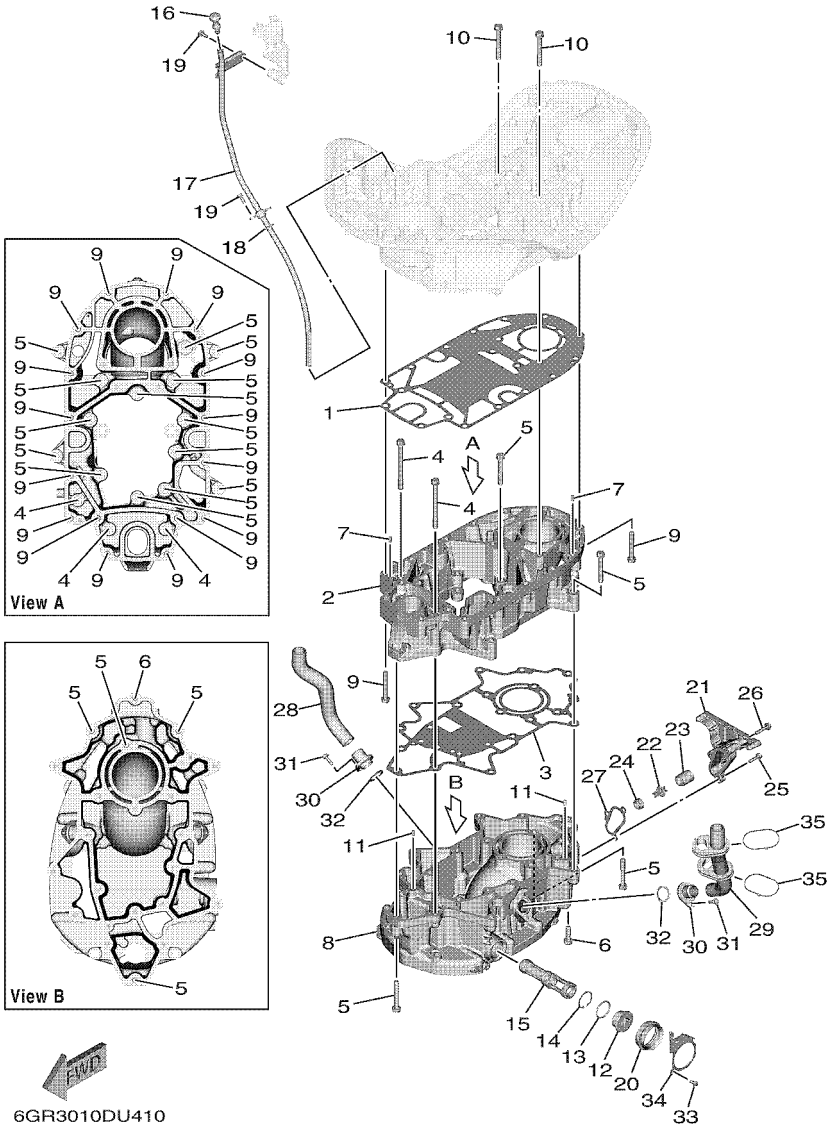

FIG. 43 OIL PAN

OIL PAN

REF. NO.	PART NO. CODIGO Nº	DESCRIPTION DESCRIPCION	6KN4	6LB4	6KP4	6LC4		REMARKS OBSERVACIONES
28	6GR–1243F–00	HOSE,3 MANGUERA 3	1	1	1	1		
29	6GR–1257A–01	HOSE ASSY 1 DURITE COMPLETO 1	1	1	1	1		
30	6GR–12581–00	JOINT, HOSE 1 CONEXION	2	2	2	2		
31	95D95–06020	BOLT, FLANGE DEEP RECESS CERROJO, REBORDE HUECO PROFUND	2	2	2	2		
32	6GR–44366–01	DAMPER, WATER SEAL 2 GOMA DEL SELLO DE AGUA 2	2	2	2	2		
33	97D95–06012	BOLT, HEXAGON DEEP RECESS TORNILLO HEXAGONAL	1	1	1	1		
34	6GR–45152–00	COVER, UPPER CASING 2 CUBIERTA FUNDA SUPERIOR 2	1	1	1	1		
35	90464–66001	CLAMP BRIDA	2	2	2	2		

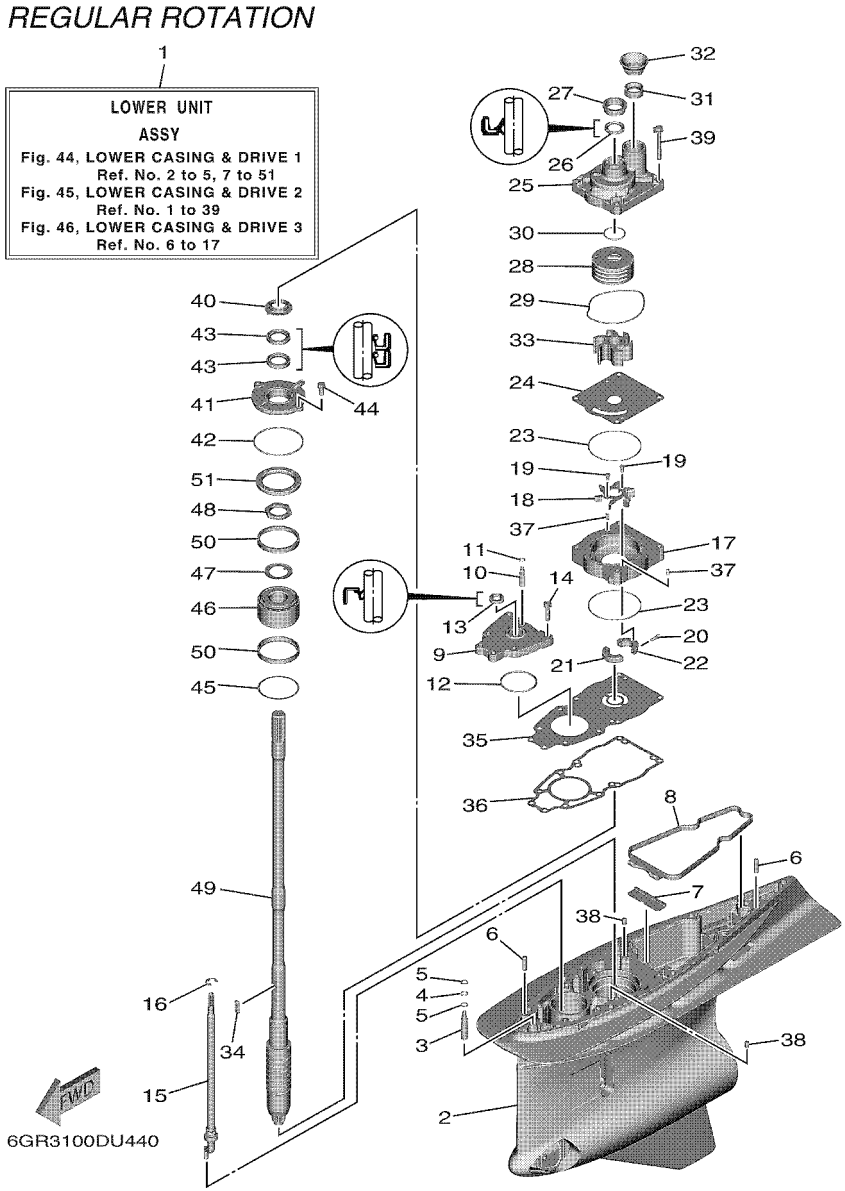

FIG. 44 LOWER CASING & DRIVE 1 — IMPULSOR E INFERIOR 1

REF. NO.	PART NO. CODIGO Nº	DESCRIPTION DESCRIPCION	6KN4	6LB4	6KP4	6LC4		REMARKS OBSERVACIONES
1	6GR–45300–06–8D	LOWER UNIT ASSY CONJUNTO UNIDAD INFERIOR	1	1				UR GRAY, X(25.2") UR GRAY, X(25.2")
	6GR–45300–06–CE	LOWER UNIT ASSY CONJUNTO UNIDAD INFERIOR	1					UR WHITE, X(25.2") UR WHITE, X(25.2")
	6GR–45300–16–8D	LOWER UNIT ASSY CONJUNTO UNIDAD INFERIOR	1	1				UR GRAY, U(30.2") UR GRAY, U(30.2")
	6GR–45300–16–CE	LOWER UNIT ASSY CONJUNTO UNIDAD INFERIOR	1					UR WHITE, U(30.2") UR WHITE, U(30.2")
2	6GR–45311–02–8D	CASING, LOWER FUNDA INFERIOR	1	1				UR GRAY UR GRAY
	6GR–45311–02–CE	CASING, LOWER FUNDA INFERIOR	1					UR WHITE UR WHITE
3	6GR–45308–00	VALVE ASSY 1 VALVULA COMPLETA 1	1	1				
4	93210–10010	O-RING ANILLO O	1	1				
5	6GR–43873–00	RING, BACK UP ANILLO	2	2				
6	99480–08030	PIN PASADOR	2	2				
7	6GR–45376–00	GUIDE, SEAL DAMPER GUIA DE SELLO GOMA	1	1				
8	6GR–45375–01	DAMPER, SEAL GOMA DE SELLO	1	1				
9	6GR–45321–00	PLATE PLACA	1	1				
10	6GR–45309–00	VALVE ASSY 2 VALVULA COMPLETA 2	1	1				
11	93210–07100	O-RING ANILLO O	1	1				
12	93210–64488	O-RING ANILLO O	1	1				
13	93106–14001	OIL SEAL SELLO ACEITE	1	1				
14	97E95–08535	BOLT, HEXAGON W/W DEEP RECESS TORNILLO HEXAGONAL CON RONDONA	6	6				
15	6GR–44150–01	SHIFT CAM ASSY CONJUNTO EJE LEVA COMPL.	1	1				UR X(25.2") UR X(25.2")
	6GR–44150–11	SHIFT CAM ASSY CONJUNTO EJE LEVA COMPL.	1	1				UR U(30.2") UR U(30.2")
16	99002–12600	CIRCLIP PRESILLA REDONDA	1	1				
17	6GR–44341–00	HOUSING, WATER PUMP CAJA BOMBA DE AGUA	1	1				
18	6GR–12451–00	IMPELLER, WATER PUMP IMPULSOR DE BOMBA DE AGUA	1	1				
19	97095–05010	BOLT PERNO	2	2				
20	91380–05016	BOLT PERNO	2	2				
21	6GR–44381–00	SPACER 1 ESPACIADOR 1	1	1				
22	6GR–44382–00	SPACER 2 ESPACIADOR 2	1	1				

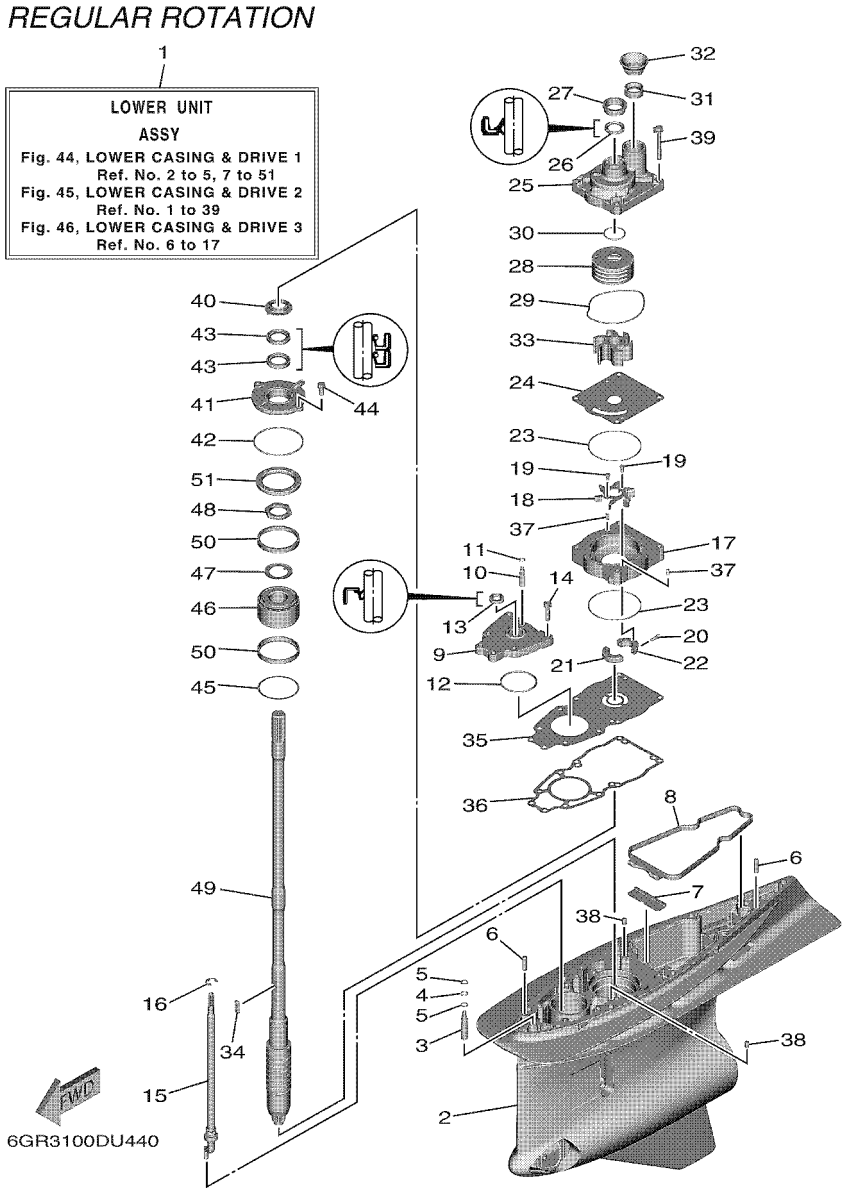

FIG. 44 LOWER CASING & DRIVE 1 — IMPULSOR E INFERIOR 1

REF. NO.	PART NO. CODIGO Nº	DESCRIPTION DESCRIPCION	6KN4	6LB4	6KP4	6LC4		REMARKS OBSERVACIONES
23	93210–97690	O-RING ANILLO O	2	2				
24	6GR–44323–00	OUTER PLATE, CARTRIDGE PLACA EXTERIOR DEL CARTUCHO	1	1				
25	6GR–44311–00	HOUSING, WATER PUMP CAJA BOMBA DE AGUA	1	1				
26	93109–26001	OIL SEAL SELLO ACEITE	1	1				
27	6GR–44312–00	COVER, WATER PUMP HOUSING CUBIERTA CAJA BOMBA DE AGUA	1	1				
28	6GR–44322–00	INSERT, CARTRIDGE CARTUCHO	1	1				
29	93211–08001	O-RING ANILLO O	1	1				
30	93210–37160	O-RING ANILLO O	1	1				
31	6GR–44365–01	DAMPER, WATER SEAL 1 HULE DE SELLO DE AGUA 1	1	1				
32	6GR–44379–00	GUIDE, WATER TUBE GUIA DE TUBO DE AGUA	1	1				
33	6GR–44352–00	IMPELLER IMPULSOR	1	1				
34	6AW–44336–00	KEY CHAVETA	1	1				
35	6GR–44328–00	PLATE PLACA	1	1				
36	6GR–44315–00	GASKET, WATER PUMP EMPAQUE	1	1				
37	93606–12019	PIN, DOWEL PASADOR DE CLAVIJA	2	2				
38	93608–12M05	PIN, DOWEL PASADOR DE CLAVIJA	2	2				
39	90119–08196	BOLT, WITH WASHER TORNILLO CON ARANDELA	4	4				
40	6GR–45344–00	COVER, OIL SEAL CUBIERTA SELLO ACEITE	1	1				
41	6GR–45335–00	HOUSING, OIL SEAL CAJA DEL SELLO DE ACEITE	1	1				
42	93210–89535	O-RING ANILLO O	1	1				
43	93101–30037	OIL SEAL SELLO ACEITE	2	2				
44	97E95–08520	BOLT, HEXAGON W/W DEEP RECESS TORNILLO HEXAGONAL CON RONDONA	2	2				
45	688–45567–01	SHIM (T:0.10MM) LAINA (T:0.10MM)	1	1				UR UR
	688–45567–10	SHIM (T:0.12MM) LAINA (T:0.12MM)	1	1				UR UR
	688–45567–20	SHIM (T:0.15MM) LAINA (T:0.15MM)	1	1				UR UR
	688–45567–30	SHIM (T:0.18MM) LAINA (T:0.18MM)	1	1				UR UR
	688–45567–40	SHIM (T:0.30MM) LAINA (T:0.30MM)	1	1				UR UR

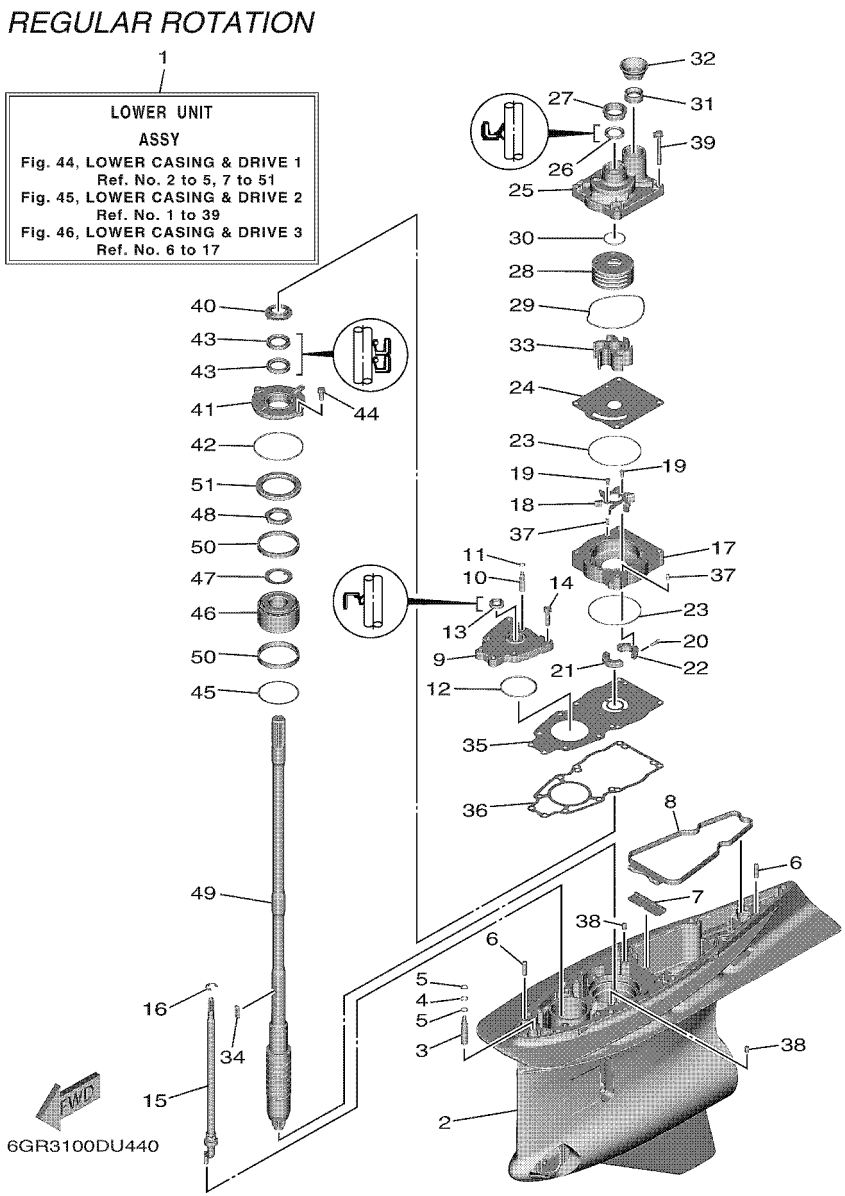

FIG. 44 LOWER CASING & DRIVE 1 — IMPULSOR E INFERIOR 1

REF. NO.	PART NO. CODIGO Nº	DESCRIPTION DESCRIPCION	6KN4	6LB4	6KP4	6LC4		REMARKS OBSERVACIONES
45	688–45567–50	SHIM (T:0.40MM) LAINA (T:0.40MM)	1	1				UR UR
	688–45567–60	SHIM (T:0.50MM) LAINA (T:0.50MM)	1	1				UR UR
46	93399–99967	BEARING COJINETE	1	1				
47	90214–35M07	WASHER, CLAW ARANDELA DE POSICION	1	1				
48	90170–35M34	NUT TUERCA	1	1				
49	6GR–45501–00	DRIVE SHAFT COMP. EJE DE MANDO COMPL.	1	1				UR X(25.2") UR X(25.2")
	6GR–45501–10	DRIVE SHAFT COMP. EJE DE MANDO COMPL.	1	1				UR U(30.2") UR U(30.2")
50	6GR–45539–00	SPACER 2 ESPACIADOR 2	2	2				
51	6GR–45244–00	NUT TUERCA	1	1				

FIG. 45 LOWER CASING & DRIVE 2 — IMPULSOR E INFERIOR 2

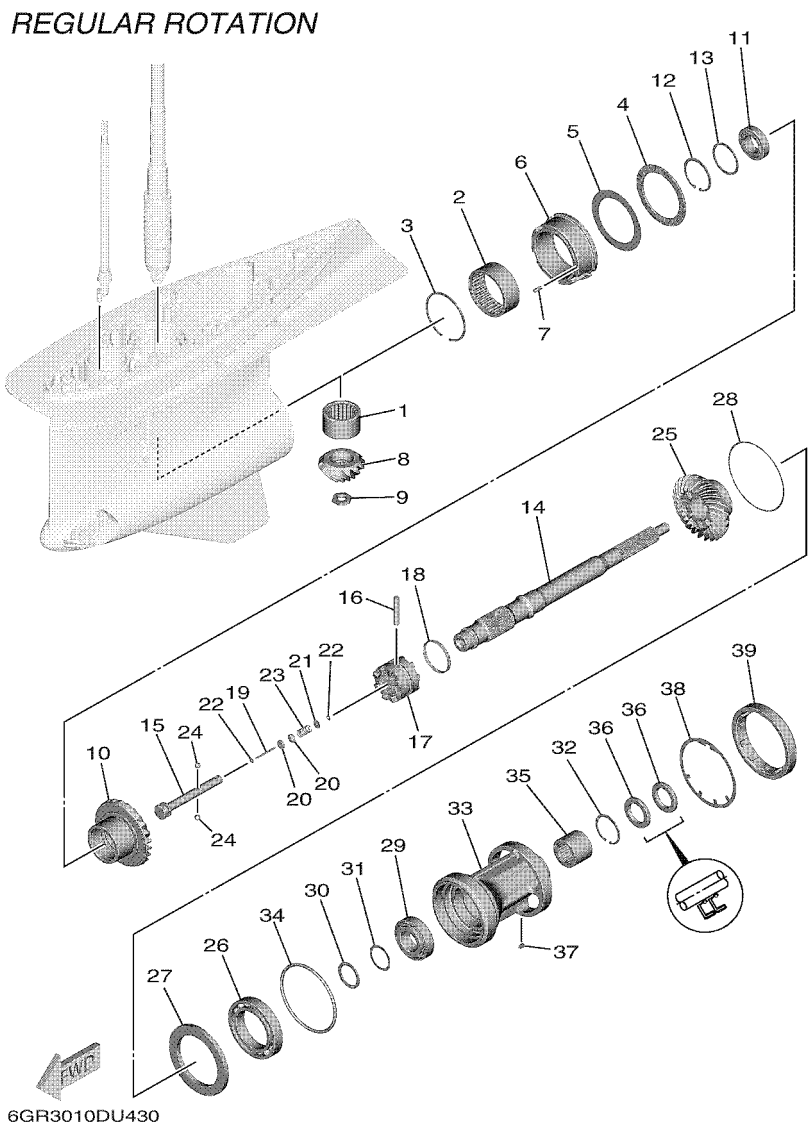

REF. NO.	PART NO. CODIGO Nº	DESCRIPTION DESCRIPCION	6KN4	6LB4	6KP4	6LC4		REMARKS OBSERVACIONES
1	93311–944A0	BEARING COJINETE DE RODILLOS	1	1				
2	93311–675A1	BEARING COJINETE DE RODILLOS	1	1				
3	93450–92171	CIRCLIP SEGURO	1	1				
4	93340–69012	BEARING COJINETES CON RODAMIENTOS	1	1				
5	6GR–45567–00	SHIM (T:2.00MM) LAINA (T:2.00MM)	1	1				UR UR
	6GR–45567–10	SHIM (T:2.03MM) LAINA (T:2.03MM)	1	1				UR UR
	6GR–45567–20	SHIM (T:2.06MM) LAINA (T:2.06MM)	1	1				UR UR
	6GR–45567–30	SHIM (T:2.09MM) LAINA (T:2.09MM)	1	1				UR UR
	6GR–45567–40	SHIM (T:2.12MM) LAINA (T:2.12MM)	1	1				UR UR
	6GR–45567–50	SHIM (T:2.15MM) LAINA (T:2.15MM)	1	1				UR UR
	6GR–45567–60	SHIM (T:2.18MM) LAINA (T:2.18MM)	1	1				UR UR
	6GR–45567–70	SHIM (T:2.21MM) LAINA (T:2.21MM)	1	1				UR UR
6	6GR–45824–00	ADAPTER ADAPTADOR	1	1				
7	93606–16117	PIN, DOWEL PASADOR DE CLAVIJA	1	1				
8	6GR–45551–00	PINION (14T) PINON (14T)	1	1				
9	90170–18009	NUT TUERCA	1	1				
10	6GR–45561–00	GEAR 1 (25T) ENGRANAJE 1 (25T)	1	1				
11	93332–000A0	BEARING COJINETE	1	1				
12	99009–62500	CIRCLIP PRESILLA REDONDA	1	1				
13	90201–54008	WASHER, PLATE ARANDELA PLANA	1	1				
14	6GR–45611–00	SHAFT, PROPELLER EJE PROPUSOR	1	1				
15	6GR–45634–00	SLIDE, SHIFT DESLIZADOR, CAMBIO	1	1				
16	6GR–45632–00	PIN, CROSS PASADOR TRANSVERSAL	1	1				
17	6GR–45631–00	CLUTCH, DOG EMBRAGUE DE GARRA	1	1				
18	6GR–45633–00	RING, CROSS PIN ANILLO DE PASADOR	1	1				
19	6H1–45668–00	SHAFT, FREE 1 EJE 1	1	1				
20	61A–45635–00	PLUNGER, SHIFT EMBOLO DE CAMBIO	2	2				

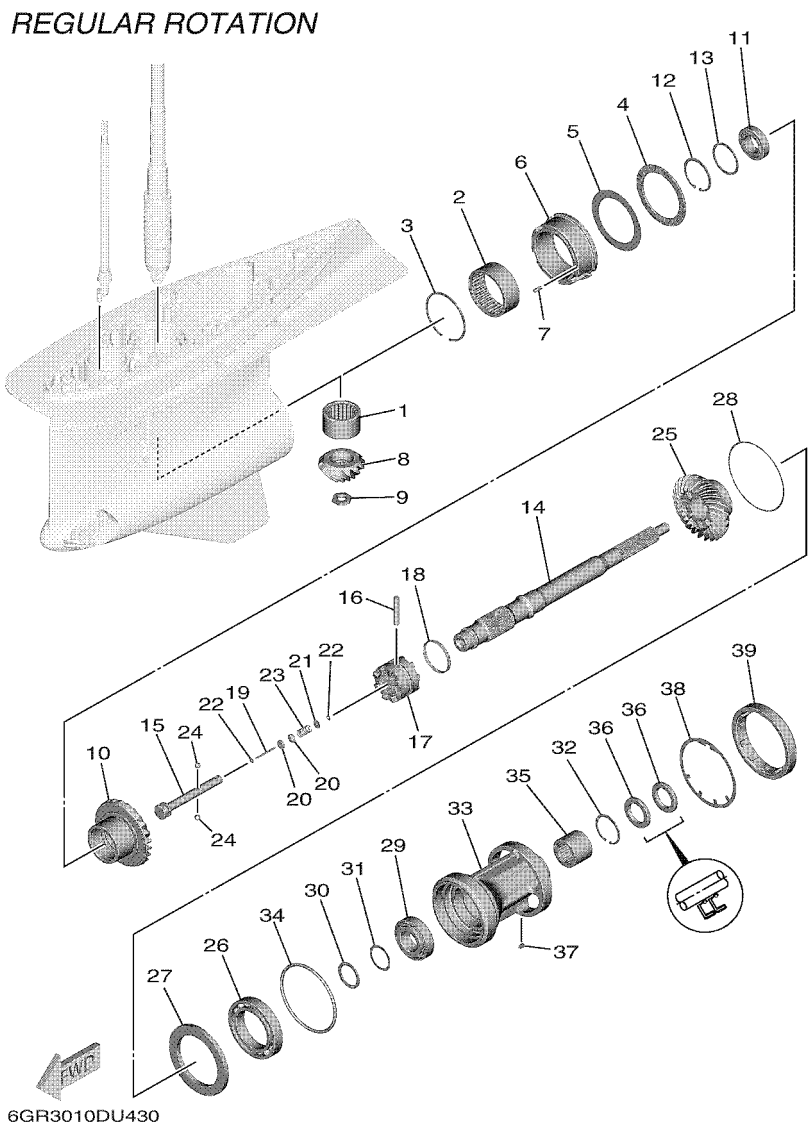

FIG. 45 LOWER CASING & DRIVE 2 — IMPULSOR E INFERIOR 2

REF. NO.	PART NO. CODIGO Nº	DESCRIPTION DESCRIPCION	6KN4	6LB4	6KP4	6LC4		REMARKS OBSERVACIONES
21	90201–02M00	WASHER, PLATE ARANDELA PLANA	1	1				
22	90183–02M03	NUT, SPRING TUERCA DE RESORTE	2	2				
23	90501–10M77	SPRING, COMPRESSION RESORTE DE COMPRESION	1	1				
24	93501–04011	BALL BOLA	2	2				
25	6GR–45571–00	GEAR 2 (25T) ENGRANAJE 2 (25T)	1	1				
26	93306–01501	BEARING COJINETE	1	1				
27	6GR–45576–00	WASHER, THRUST 2 ARANDELA DE EMPUJE AXIAL 2	1	1				
28	6GR–45577–00	SHIM (T:0.10MM) LAINA (T:0.10MM)	1	1				UR UR
	6GR–45577–10	SHIM (T:0.12MM) LAINA (T:0.12MM)	1	1				UR UR
	6GR–45577–20	SHIM (T:0.15MM) LAINA (T:0.15MM)	1	1				UR UR
	6GR–45577–30	SHIM (T:0.18MM) LAINA (T:0.18MM)	1	1				UR UR
	6GR–45577–40	SHIM (T:0.30MM) LAINA (T:0.30MM)	1	1				UR UR
	6GR–45577–50	SHIM (T:0.40MM) LAINA (T:0.40MM)	1	1				UR UR
	6GR–45577–60	SHIM (T:0.50MM) LAINA (T:0.50MM)	1	1				UR UR
29	93332–00042	BEARING COJINETE	1	1				
30	90201–40008	WASHER, PLATE ARANDELA PLANA	1	1				
31	6GR–45578–00	SHIM (T:0.10MM) LAINA (T:0.10MM)	1	1				UR UR
	6GR–45578–10	SHIM (T:0.12MM) LAINA (:0.12MM)	1	1				UR UR
	6GR–45578–20	SHIM (T:0.15MM) LAINA (T:0.15MM)	1	1				UR UR
	6GR–45578–30	SHIM (T:0.18MM) LAINA (T:0.18MM)	1	1				UR UR
	6GR–45578–40	SHIM (T:0.30MM) LAINA (T:0.30MM)	1	1				UR UR
	6GR–45578–50	SHIM (T:0.40MM) LAINA (T:0.40MM)	1	1				UR UR
	6GR–45578–60	SHIM (T:0.50MM) LAINA (T:0.50MM)	1	1				UR UR
	6GR–45578–70	SHIM (T:1.00MM) LAINA (T:1.00MM)	1	1				UR UR
32	99009–55500	CIRCLIP PRESILLA REDONDA	1	1				
33	6GR–45332–00	HOUSING, BEARING CAJA BALERO 2	1	1				
34	93211–26001	O-RING ANILLO O	1	1				

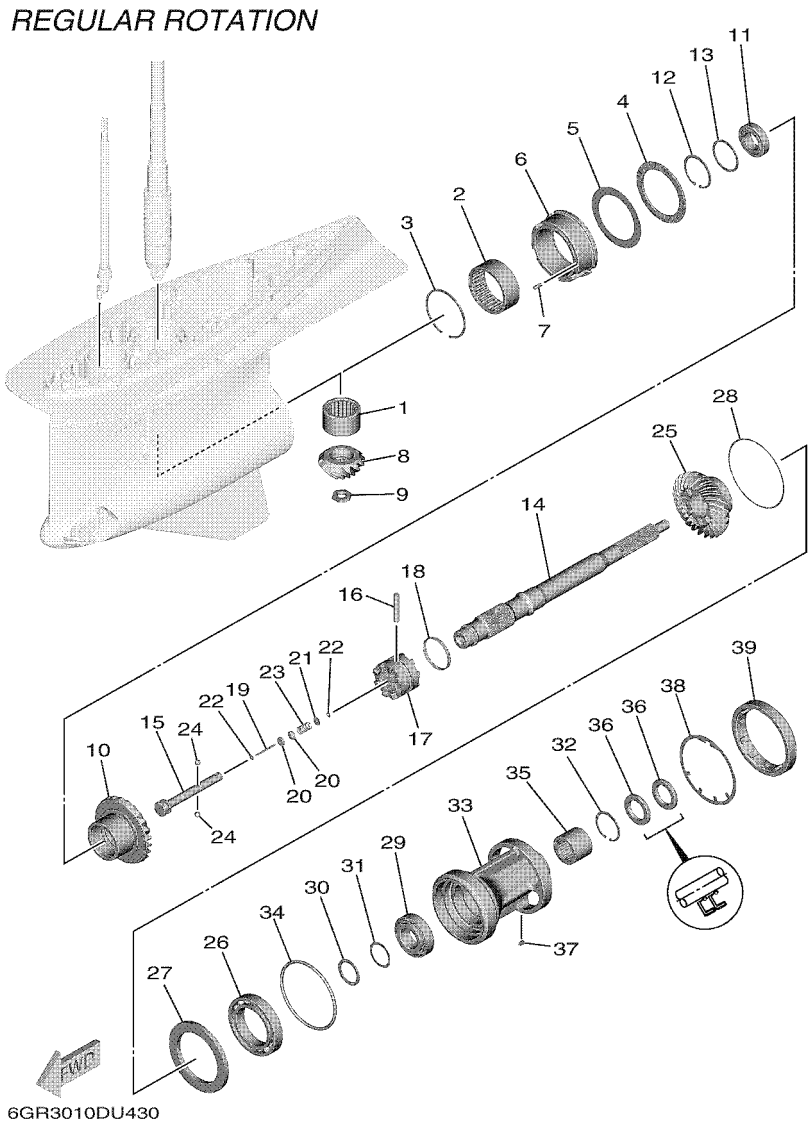

FIG. 45 LOWER CASING & DRIVE 2 — IMPULSOR E INFERIOR 2

REF. NO.	PART NO. CODIGO Nº	DESCRIPTION DESCRIPCION	6KN4	6LB4	6KP4	6LC4		REMARKS OBSERVACIONES
35	93311–737A2	BEARING COJINETE DE RODILLOS	1	1				
36	93101–37001	OIL SEAL SELLO ACEITE	2	2				
37	90282–05008	KEY, STRAIGHT CHAVETA, RECTA	1	1				
38	6GR–45383–00	WASHER, CLAW ARANDELA DE UNA	1	1				
39	6GR–45384–00	NUT TUERCA	1	1				

FIG. 46 LOWER CASING & DRIVE 3 — IMPULSOR E INFERIOR 3

REGULAR ROTATION

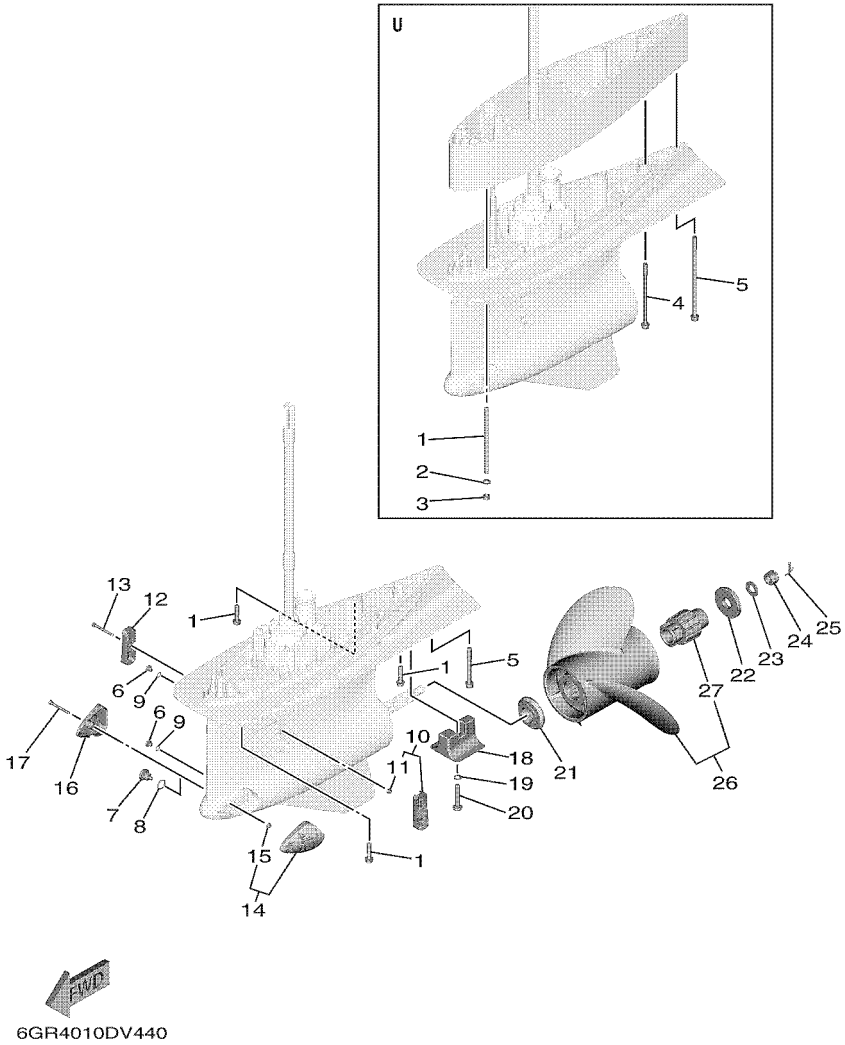

REF. NO.	PART NO. CODIGO Nº	DESCRIPTION DESCRIPCION	6KN4	6LB4	6KP4	6LC4		REMARKS OBSERVACIONES
1	90119–10024	BOLT, WITH WASHER TORNILLO CON ARANDELA	9	9				UR X(25.2") UR X(25.2")
	90116–10067	BOLT, STUD ESPARRAGO	8	8				UR U(30.2") UR U(30.2")
2	92995–10600	WASHER ARANDELA	8	8				U(30.2") U(30.2")
3	95380–10600	NUT TUERCA	8	8				U(30.2") U(30.2")
4	90119–10009	BOLT, WITH WASHER TORNILLO CON ARANDELA	1	1				U(30.2") U(30.2")
5	90110–10053	BOLT, HEXAGON SOCKET HEAD TORNILLO ALLEN	1	1				UR X(25.2") UR X(25.2")
	90110–10054	BOLT, HEXAGON SOCKET HEAD TORNILLO ALLEN	1	1				UR U(30.2") UR U(30.2")
6	90340–08003	PLUG, STRAIGHT SCREW TORNILLO, DE DRENAJE	2	2				
7	6GR–45341–00	PLUG, DRAIN TAPON, DREN	1	1				
8	93210–19123	O-RING ANILLO O	1	1				
9	93210–09165	O-RING ANILLO O	2	2				
10	6GR–45214–01	COVER, WATER INLET 1 CUBIERTA, ENTRADA AGUA 1	1	1				
11	90185–06M07	.NUT, SELF-LOCKING .TUERCA AUTOBLOCANTE	1	1				
12	6GR–45215–01	COVER, WATER INLET 2 CUBIERTA, ENTRADA AGUA 2	1	1				
13	90110–06425	BOLT, HEXAGON SOCKET HEAD TORNILLO ALLEN	1	1				
14	6KN–45224–00	COVER, WATER INLET 3 CUBIERTA, ENTRADA AGUA 3	1	1				
15	90185–06M07	.NUT, SELF-LOCKING .TUERCA AUTOBLOCANTE	1	1				
16	6KN–45225–00	COVER, WATER INLET 4 CUBIERTA, ENTRADA AGUA 4	1	1				
17	90110–06425	BOLT, HEXAGON SOCKET HEAD TORNILLO ALLEN	1	1				
18	6AW–45373–00	ANODE ANODO	1	1				
19	92990–10300	WASHER ARANDELA PLANA	1	1				
20	90105–10257	BOLT, FLANGE TORNILLO	1	1				
21	6GR–45987–00	SPACER 1 ESPACIADOR 1	1	1				
22	6GR–45997–00	SPACER 2 ESPACIADOR 2	1	1				
23	90201–19M01	WASHER, PLATE ARANDELA PLANA	1	1				
24	90171–18M04	NUT, CASTLE TUERCA ENTALLADA	1	1				
25	91490–40030	PIN. COTTER CHAVETA	1	1				

FIG. 46 LOWER CASING & DRIVE 3 — IMPULSOR E INFERIOR 3

REGULAR ROTATION

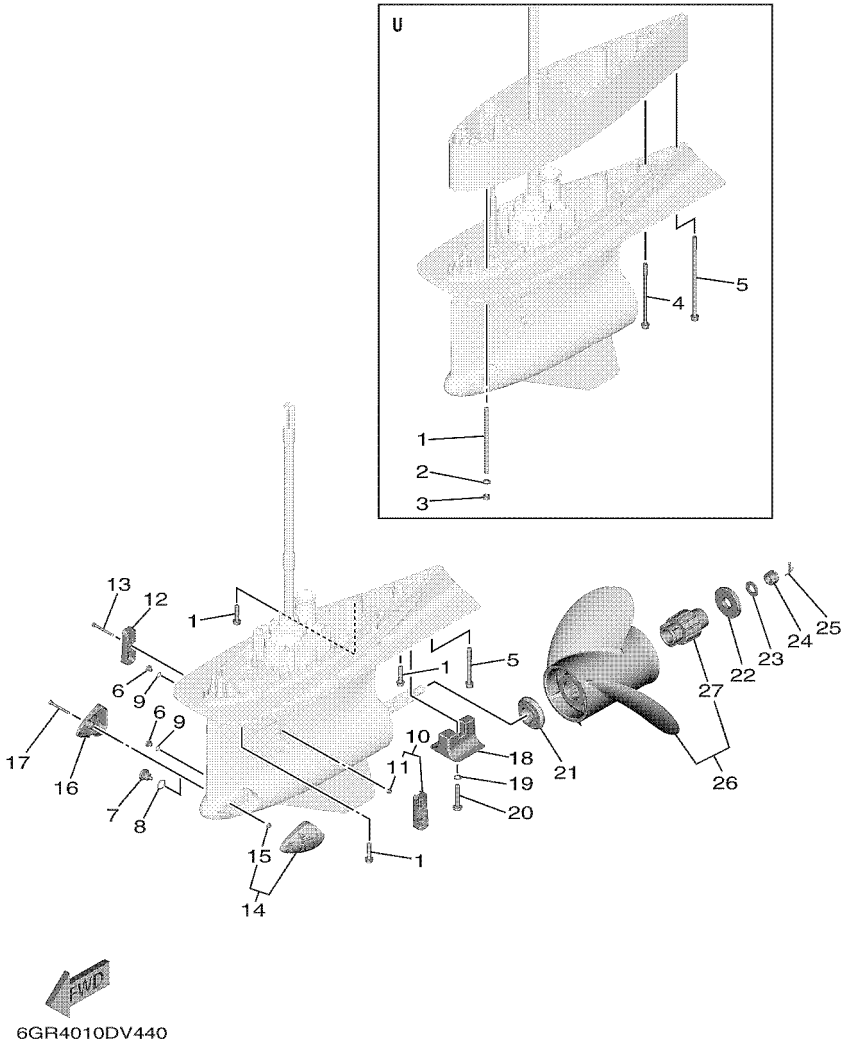

REF. NO.	PART NO. CODIGO Nº	DESCRIPTION DESCRIPCION	6KN4	6LB4	6KP4	6LC4		REMARKS OBSERVACIONES
26	6GR–45970–20	PROPELLER (3X17-1/8"X15"-Y2) PROPELA (3X17-1/8"X15"-Y2)	1	1				UR SDS 3 BLADE UR SDS 3 BLADE
	6GR–45D70–20	PROPELLER (3X16-7/8"X16"-Y2) PROPELA (3X16-7/8"X16"-Y2)	1	1				UR SDS 3 BLADE UR SDS 3 BLADE
	6KN–45938–00	PROPELLER (3X16-7/8"X16"-Y) PROPELA (3X16-7/8"X16"-Y)	1	1				UR SDS 3 BLADE UR SDS 3 BLADE
	6GR–45972–20	PROPELLER (3X16-7/8"X17"-Y2) PROPELA (3X16-7/8"X17"-Y2)	1	1				UR SDS 3 BLADE UR SDS 3 BLADE
	6KN–45970–00	PROPELLER (3X16-7/8"X17"-Y) PROPELA (3X16-7/8"X17"-Y)	1	1				UR SDS 3 BLADE UR SDS 3 BLADE
	6GR–45938–20	PROPELLER (3X16-5/8"X18"-Y2) PROPELA (3X16-5/8"X18"-Y2)	1	1				UR SDS 3 BLADE UR SDS 3 BLADE
	6KN–45936–00	PROPELLER (3X16-7/8"X18"-Y) PROPELA (3X16-7/8"X18"-Y)	1	1				UR SDS 3 BLADE UR SDS 3 BLADE
	6GR–45974–20	PROPELLER (3X16-5/8"X19"-Y2) PROPELA (3X16-5/8"X19"-Y2)	1	1				UR SDS 3 BLADE UR SDS 3 BLADE
	6GR–45936–20	PROPELLER (3X16-3/8"X20"-Y2) PROPELA (3X16-3/8"X20"-Y2)	1	1				UR SDS 3 BLADE UR SDS 3 BLADE
	6KN–45976–00	PROPELLER (3X16-5/8"X20"-Y) PROPELA (3X16-5/8"X20"-Y)	1	1				UR SDS 3 BLADE UR SDS 3 BLADE
	6GR–45976–20	PROPELLER (3X16-3/8"X21"-Y2) PROPELA (3X16-3/8"X21"-Y2)	1	1				UR SDS 3 BLADE UR SDS 3 BLADE
	6KN–45978–00	PROPELLER (3X16-3/8"X21"-Y) PROPELA (3X16-3/8"X21"-Y)	1	1				UR SDS 3 BLADE UR SDS 3 BLADE
	6GR–45934–20	PROPELLER (3X16-1/8"X22"-Y2) PROPELA (3X16-1/8"X22"-Y2)	1	1				UR SDS 3 BLADE UR SDS 3 BLADE
	6KN–45934–00	PROPELLER (3X16-3/8"X22"-Y) PROPELA (3X16-3/8"X22"-Y)	1	1				UR SDS 3 BLADE UR SDS 3 BLADE
	6GR–45978–20	PROPELLER (3X16-1/8"X23"-Y2) PROPELA (3X16-1/8"X23"-Y2)	1	1				UR SDS 3 BLADE UR SDS 3 BLADE
	6KN–45932–00	PROPELLER (3X16-1/8"X23"-Y) PROPELA (3X16-1/8"X23"-Y)	1	1				UR SDS 3 BLADE UR SDS 3 BLADE
	6GR–45932–20	PROPELLER (3X16"X24"-Y2) PROPELA (3X16"X24"-Y2)	1	1				UR SDS 3 BLADE UR SDS 3 BLADE
	6KN–45972–00	PROPELLER (3X16-1/8"X24"-Y) PROPELA (3X16-1/8"X24"-Y)	1	1				UR SDS 3 BLADE UR SDS 3 BLADE
	6GR–45930–20	PROPELLER (3X16"X25"-Y2) PROPELA (3X16"X25"-Y2)	1	1				UR SDS 3 BLADE UR SDS 3 BLADE
	6KN–45974–00	PROPELLER (3X16-1/8"X25"-Y) PROPELA (3X16-1/8"X25"-Y)	1	1				UR SDS 3 BLADE UR SDS 3 BLADE
	6GR–45D72–20	PROPELLER (3X16"X26"-Y2) PROPELA (3X16"X26"-Y2)	1	1				UR SDS 3 BLADE UR SDS 3 BLADE
	6KN–45930–00	PROPELLER (3X16-1/8"X26"-Y) PROPELA (3X16-1/8"X26"-Y)	1	1				UR SDS 3 BLADE UR SDS 3 BLADE
	6GR–45D74–20	PROPELLER (3X16"X27"-Y2) PROPELA (3X16"X27"-Y2)	1	1				UR SDS 3 BLADE UR SDS 3 BLADE
27	6GR–45C81–10	.DAMPER RUBBER, PROPELLER 1 .AMORTIGUADOR PROPELA 1	1	1				

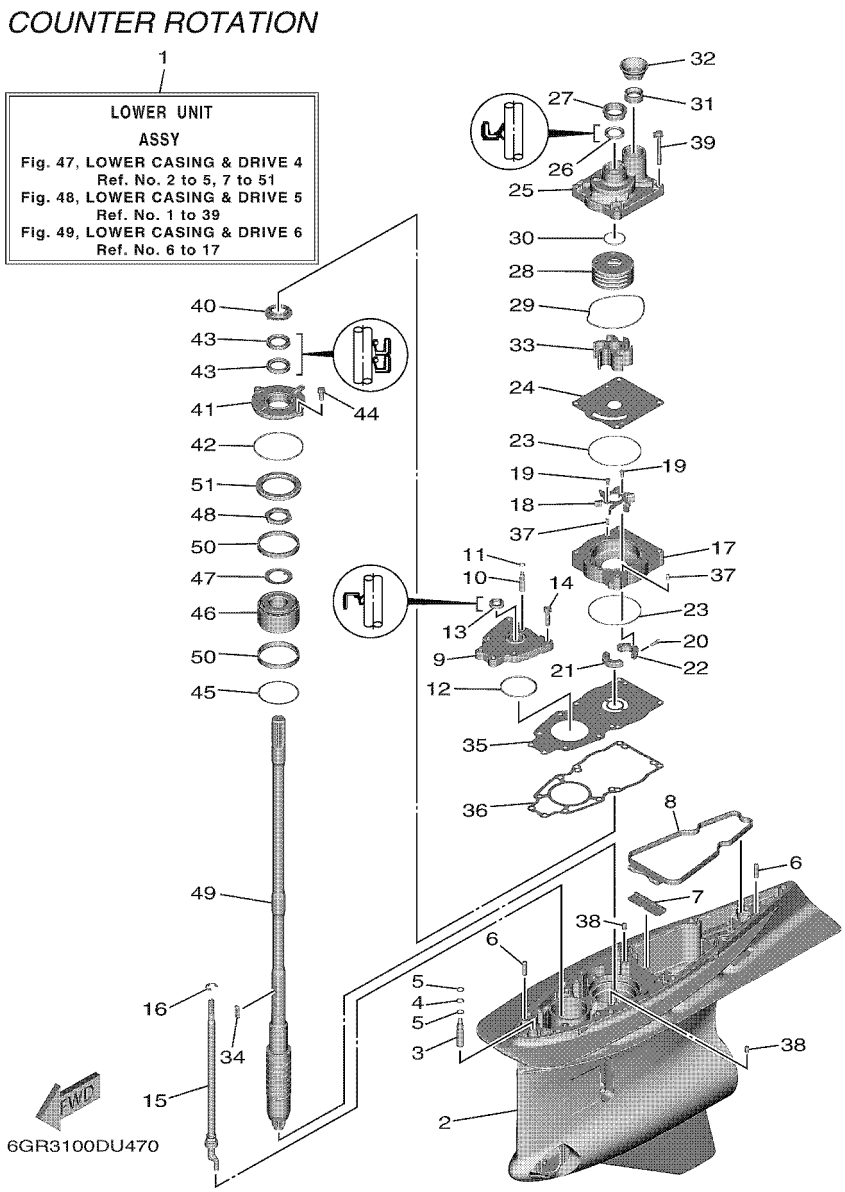

FIG. 47 LOWER CASING & DRIVE 4 — IMPULSOR E INFERIOR 4

REF. NO.	PART NO. CODIGO Nº	DESCRIPTION DESCRIPCION	6KN4	6LB4	6KP4	6LC4		REMARKS OBSERVACIONES
1	6GS–45300–06–8D	LOWER UNIT ASSY CONJUNTO UNIDAD INFERIOR			1	1		UR GRAY, X(25.2") UR GRAY, X(25.2")
	6GS–45300–06–CE	LOWER UNIT ASSY CONJUNTO UNIDAD INFERIOR			1			UR WHITE, X(25.2") UR WHITE, X(25.2")
	6GS–45300–16–8D	LOWER UNIT ASSY CONJUNTO UNIDAD INFERIOR			1	1		UR GRAY, U(30.2") UR GRAY, U(30.2")
	6GS–45300–16–CE	LOWER UNIT ASSY CONJUNTO UNIDAD INFERIOR			1			UR WHITE, U(30.2") UR WHITE, U(30.2")
2	6GR–45311–02–8D	CASING, LOWER FUNDA INFERIOR			1	1		UR GRAY UR GRAY
	6GR–45311–02–CE	CASING, LOWER FUNDA INFERIOR			1			UR WHITE UR WHITE
3	6GR–45308–00	VALVE ASSY 1 VALVULA COMPLETA 1			1	1		
4	93210–10010	O-RING ANILLO O			1	1		
5	6GR–43873–00	RING, BACK UP ANILLO			2	2		
6	99480–08030	PIN PASADOR			2	2		
7	6GR–45376–00	GUIDE, SEAL DAMPER GUIA DE SELLO GOMA			1	1		
8	6GR–45375–01	DAMPER, SEAL GOMA DE SELLO			1	1		
9	6GR–45321–00	PLATE PLACA			1	1		
10	6GR–45309–00	VALVE ASSY 2 VALVULA COMPLETA 2			1	1		
11	93210–07100	O-RING ANILLO O			1	1		
12	93210–64488	O-RING ANILLO O			1	1		
13	93106–14001	OIL SEAL SELLO ACEITE			1	1		
14	97E95–08535	BOLT, HEXAGON W/W DEEP RECESS TORNILLO HEXAGONAL CON RONDONA			6	6		
15	6GS–44150–01	SHIFT CAM ASSY CONJUNTO EJE LEVA COMPL.			1	1		UR X(25.2") UR X(25.2")
	6GS–44150–11	SHIFT CAM ASSY CONJUNTO EJE LEVA COMPL.			1	1		UR U(30.2") UR U(30.2")
16	99002–12600	CIRCLIP PRESILLA REDONDA			1	1		
17	6GR–44341–00	HOUSING, WATER PUMP CAJA BOMBA DE AGUA			1	1		
18	6GR–12451–00	IMPELLER, WATER PUMP IMPULSOR DE BOMBA DE AGUA			1	1		
19	97095–05010	BOLT PERNO			2	2		
20	91380–05016	BOLT PERNO			2	2		
21	6GR–44381–00	SPACER 1 ESPACIADOR 1			1	1		
22	6GR–44382–00	SPACER 2 ESPACIADOR 2			1	1		

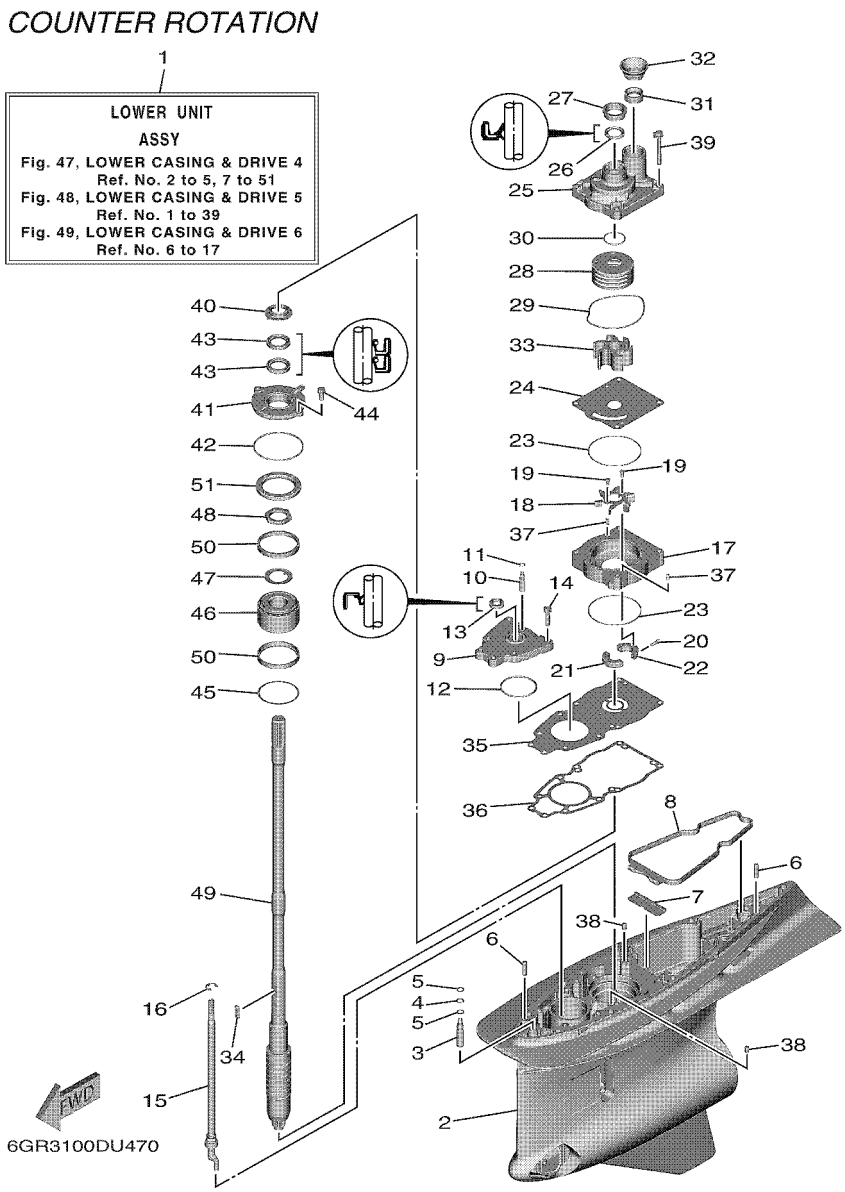

FIG. 47 LOWER CASING & DRIVE 4 — IMPULSOR E INFERIOR 4

REF. NO.	PART NO. CODIGO Nº	DESCRIPTION DESCRIPCION	6KN4	6LB4	6KP4	6LC4		REMARKS OBSERVACIONES
23	93210–97690	O-RING ANILLO O			2	2		
24	6GR–44323–00	OUTER PLATE, CARTRIDGE PLACA EXTERIOR DEL CARTUCHO			1	1		
25	6GR–44311–00	HOUSING, WATER PUMP CAJA BOMBA DE AGUA			1	1		
26	93109–26001	OIL SEAL SELLO ACEITE			1	1		
27	6GR–44312–00	COVER, WATER PUMP HOUSING CUBIERTA CAJA BOMBA DE AGUA			1	1		
28	6GR–44322–00	INSERT, CARTRIDGE CARTUCHO			1	1		
29	93211–08001	O-RING ANILLO O			1	1		
30	93210–37160	O-RING ANILLO O			1	1		
31	6GR–44365–01	DAMPER, WATER SEAL 1 HULE DE SELLO DE AGUA 1			1	1		
32	6GR–44379–00	GUIDE, WATER TUBE GUIA DE TUBO DE AGUA			1	1		
33	6GR–44352–00	IMPELLER IMPULSOR			1	1		
34	6AW–44336–00	KEY CHAVETA			1	1		
35	6GR–44328–00	PLATE PLACA			1	1		
36	6GR–44315–00	GASKET, WATER PUMP EMPAQUE			1	1		
37	93606–12019	PIN, DOWEL PASADOR DE CLAVIJA			2	2		
38	93608–12M05	PIN, DOWEL PASADOR DE CLAVIJA			2	2		
39	90119–08196	BOLT, WITH WASHER TORNILLO CON ARANDELA			4	4		
40	6GR–45344–00	COVER, OIL SEAL CUBIERTA SELLO ACEITE			1	1		
41	6GR–45335–00	HOUSING, OIL SEAL CAJA DEL SELLO DE ACEITE			1	1		
42	93210–89535	O-RING ANILLO O			1	1		
43	93101–30037	OIL SEAL SELLO ACEITE			2	2		
44	97E95–08520	BOLT, HEXAGON W/W DEEP RECESS TORNILLO HEXAGONAL CON RONDONA			2	2		
45	688–45567–01	SHIM (T:0.10MM) LAINA (T:0.10MM)			1	1		UR UR
	688–45567–10	SHIM (T:0.12MM) LAINA (T:0.12MM)			1	1		UR UR
	688–45567–20	SHIM (T:0.15MM) LAINA (T:0.15MM)			1	1		UR UR
	688–45567–30	SHIM (T:0.18MM) LAINA (T:0.18MM)			1	1		UR UR
	688–45567–40	SHIM (T:0.30MM) LAINA (T:0.30MM)			1	1		UR UR

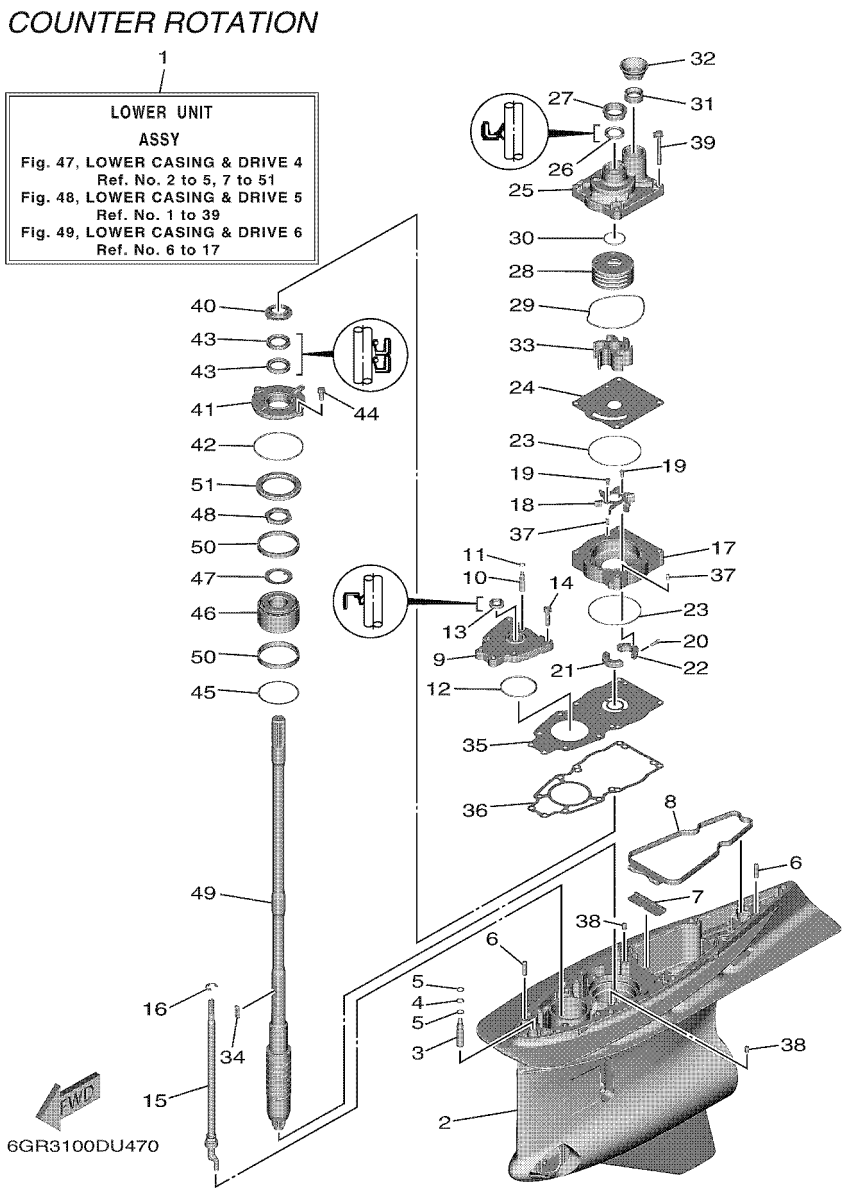

FIG. 47 LOWER CASING & DRIVE 4 — IMPULSOR E INFERIOR 4

REF. NO.	PART NO. CODIGO Nº	DESCRIPTION DESCRIPCION	6KN4	6LB4	6KP4	6LC4		REMARKS OBSERVACIONES
45	688–45567–50	SHIM (T:0.40MM) LAINA (T:0.40MM)			1	1		UR UR
	688–45567–60	SHIM (T:0.50MM) LAINA (T:0.50MM)			1	1		UR UR
46	93399–99967	BEARING COJINETE			1	1		
47	90214–35M07	WASHER, CLAW ARANDELA DE POSICION			1	1		
48	90170–35M34	NUT TUERCA			1	1		
49	6GR–45501–00	DRIVE SHAFT COMP. EJE DE MANDO COMPL.			1	1		UR X(25.2") UR X(25.2")
	6GR–45501–10	DRIVE SHAFT COMP. EJE DE MANDO COMPL.			1	1		UR U(30.2") UR U(30.2")
50	6GR–45539–00	SPACER 2 ESPACIADOR 2			2	2		
51	6GR–45244–00	NUT TUERCA			1	1		

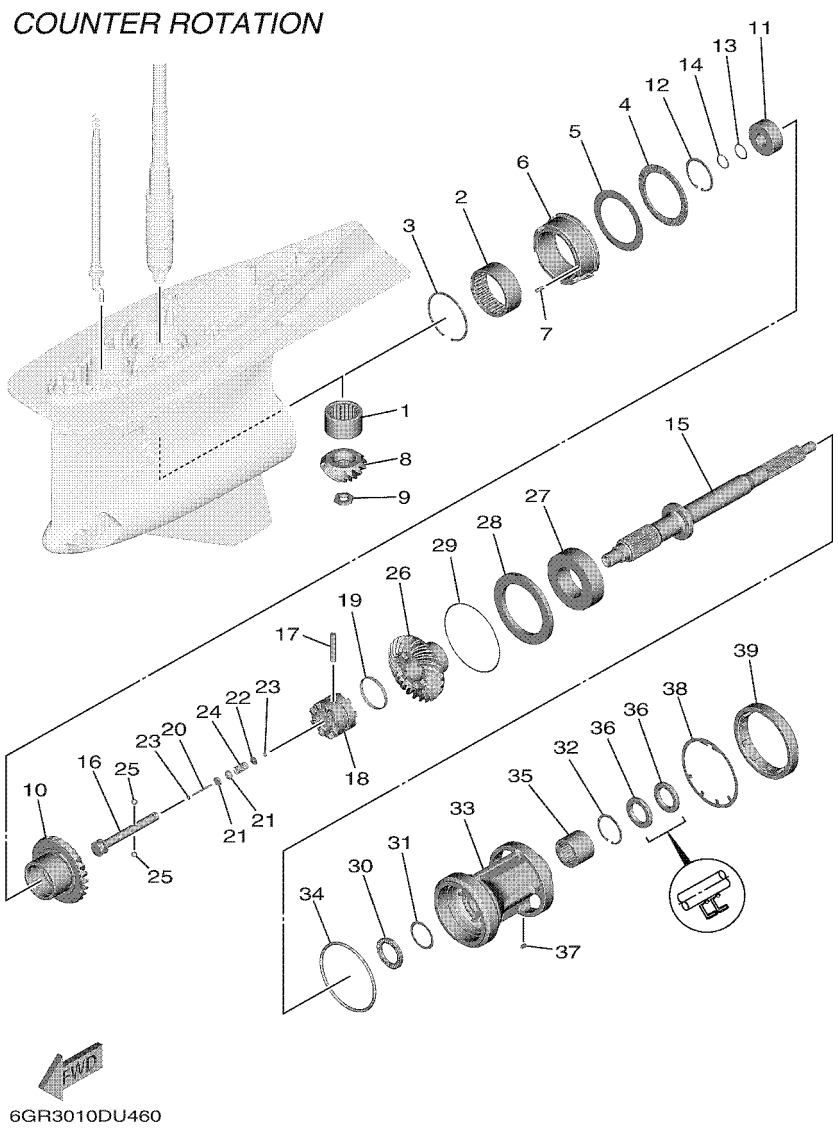

FIG. 48 LOWER CASING & DRIVE 5 — IMPULSOR E INFERIOR 5

REF. NO.	PART NO. CODIGO Nº	DESCRIPTION DESCRIPCION	6KN4	6LB4	6KP4	6LC4		REMARKS OBSERVACIONES
1	93311–944A0	BEARING COJINETE DE RODILLOS			1	1		
2	93311–675A1	BEARING COJINETE DE RODILLOS			1	1		
3	93450–92171	CIRCLIP SEGURO			1	1		
4	93340–69012	BEARING COJINETES CON RODAMIENTOS			1	1		
5	6GR–45567–00	SHIM (T:2.00MM) LAINA (T:2.00MM)			1	1		UR UR
	6GR–45567–10	SHIM (T:2.03MM) LAINA (T:2.03MM)			1	1		UR UR
	6GR–45567–20	SHIM (T:2.06MM) LAINA (T:2.06MM)			1	1		UR UR
	6GR–45567–30	SHIM (T:2.09MM) LAINA (T:2.09MM)			1	1		UR UR
	6GR–45567–40	SHIM (T:2.12MM) LAINA (T:2.12MM)			1	1		UR UR
	6GR–45567–50	SHIM (T:2.15MM) LAINA (T:2.15MM)			1	1		UR UR
	6GR–45567–60	SHIM (T:2.18MM) LAINA (T:2.18MM)			1	1		UR UR
	6GR–45567–70	SHIM (T:2.21MM) LAINA (T:2.21MM)			1	1		UR UR
6	6GR–45824–00	ADAPTER ADAPTADOR			1	1		
7	93606–16117	PIN, DOWEL PASADOR DE CLAVIJA			1	1		
8	6GR–45551–00	PINION (14T) PINON (14T)			1	1		
9	90170–18009	NUT TUERCA			1	1		
10	6GS–45561–00	GEAR 1 (25T) ENGRANAJE 1 (25T)			1	1		
11	93390–00033	BEARING COJINETE DE RODILLOS			1	1		
12	99009–62500	CIRCLIP PRESILLA REDONDA			1	1		
13	90201–253K0	WASHER, PLATE (T=1.0) ARANDELA DE PLACA (T=1.0)			1	1		
14	93440–25020	CIRCLIP SEGURO			1	1		
15	6GS–45611–01	SHAFT, PROPELLER EJE PROPUSOR			1	1		
16	6GR–45634–00	SLIDE, SHIFT DESLIZADOR, CAMBIO			1	1		
17	6GR–45632–00	PIN, CROSS PASADOR TRANSVERSAL			1	1		
18	6GR–45631–00	CLUTCH, DOG EMBRAGUE DE GARRA			1	1		
19	6GR–45633–00	RING, CROSS PIN ANILLO DE PASADOR			1	1		
20	6H1–45668–00	SHAFT, FREE 1 EJE 1			1	1		

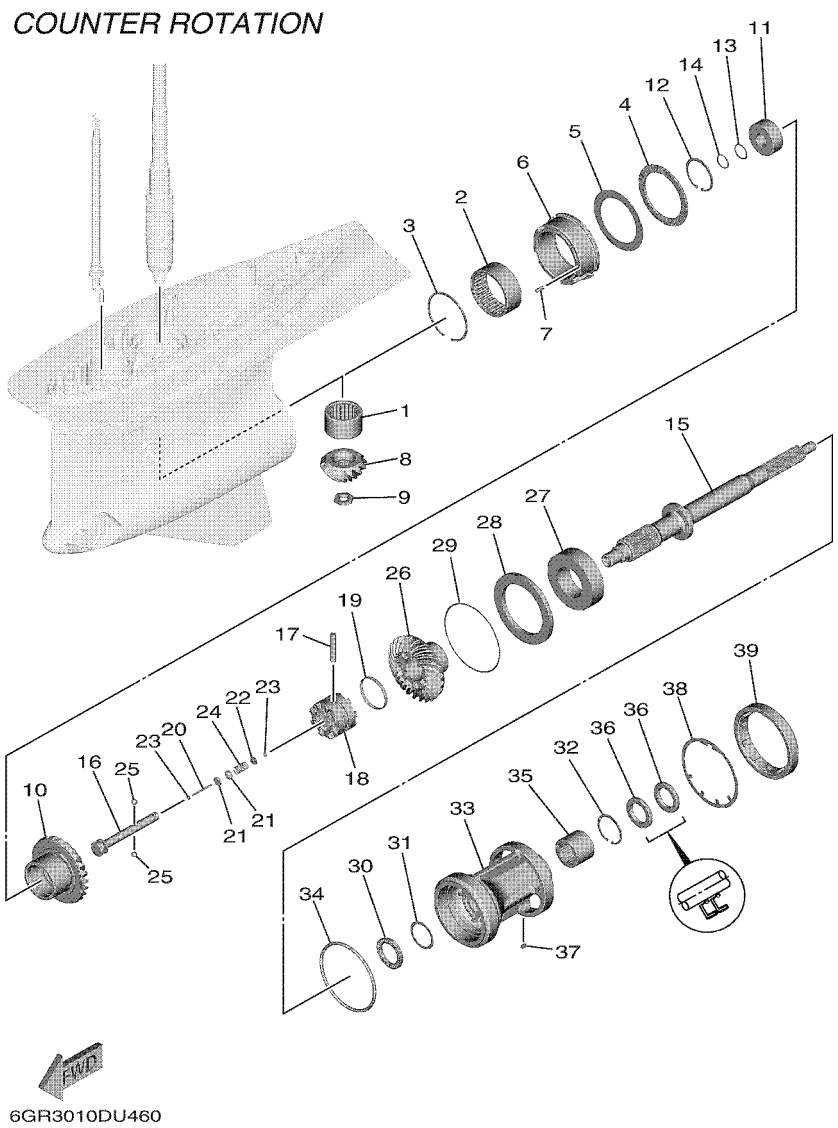

FIG. 48 LOWER CASING & DRIVE 5 — IMPULSOR E INFERIOR 5

REF. NO.	PART NO. CODIGO Nº	DESCRIPTION DESCRIPCION	6KN4	6LB4	6KP4	6LC4		REMARKS OBSERVACIONES
21	61A–45635–00	PLUNGER, SHIFT EMBOLO DE CAMBIO			2	2		
22	90201–02M00	WASHER, PLATE ARANDELA PLANA			1	1		
23	90183–02M03	NUT, SPRING TUERCA DE RESORTE			2	2		
24	90501–10M77	SPRING, COMPRESSION RESORTE DE COMPRESION			1	1		
25	93501–04011	BALL BOLA			2	2		
26	6GS–45571–00	GEAR 2 (25T) ENGRANAJE 2 (25T)			1	1		
27	93332–000B2	BEARING COJINETE			1	1		
28	6GR–45576–00	WASHER, THRUST 2 ARANDELA DE EMPUJE AXIAL 2			1	1		
29	6GR–45577–00	SHIM (T:0.10MM) LAINA (T:0.10MM)			1	1		UR UR
	6GR–45577–10	SHIM (T:0.12MM) LAINA (T:0.12MM)			1	1		UR UR
	6GR–45577–20	SHIM (T:0.15MM) LAINA (T:0.15MM)			1	1		UR UR
	6GR–45577–30	SHIM (T:0.18MM) LAINA (T:0.18MM)			1	1		UR UR
	6GR–45577–40	SHIM (T:0.30MM) LAINA (T:0.30MM)			1	1		UR UR
	6GR–45577–50	SHIM (T:0.40MM) LAINA (T:0.40MM)			1	1		UR UR
	6GR–45577–60	SHIM (T:0.50MM) LAINA (T:0.50MM)			1	1		UR UR
30	93341–440U5	BEARING COJINETES CON RODAMIENTOS			1	1		
31	6K1–45578–01	SHIM (T:0.10MM) LAINA (T:0.10MM)			1	1		UR UR
	6K1–45578–10	SHIM (T:0.12MM) LAINA (:0.12MM)			1	1		UR UR
	6K1–45578–20	SHIM (T:0.15MM) LAINA (T:0.15MM)			1	1		UR UR
	6K1–45578–30	SHIM (T:0.18MM) LAINA (T:0.18MM)			1	1		UR UR
	6K1–45578–40	SHIM (T:0.30MM) LAINA (T:0.30MM)			1	1		UR UR
	6K1–45578–50	SHIM (T:0.40MM) LAINA (T:0.40MM)			1	1		UR UR
	6K1–45578–60	SHIM (T:0.50MM) LAINA (T:0.50MM)			1	1		UR UR
32	99009–55500	CIRCLIP PRESILLA REDONDA			1	1		
33	6GS–45332–00	HOUSING, BEARING CAJA BALERO 2			1	1		
34	93211–26001	O-RING ANILLO O			1	1		
35	93311–737A2	BEARING COJINETE DE RODILLOS			1	1		

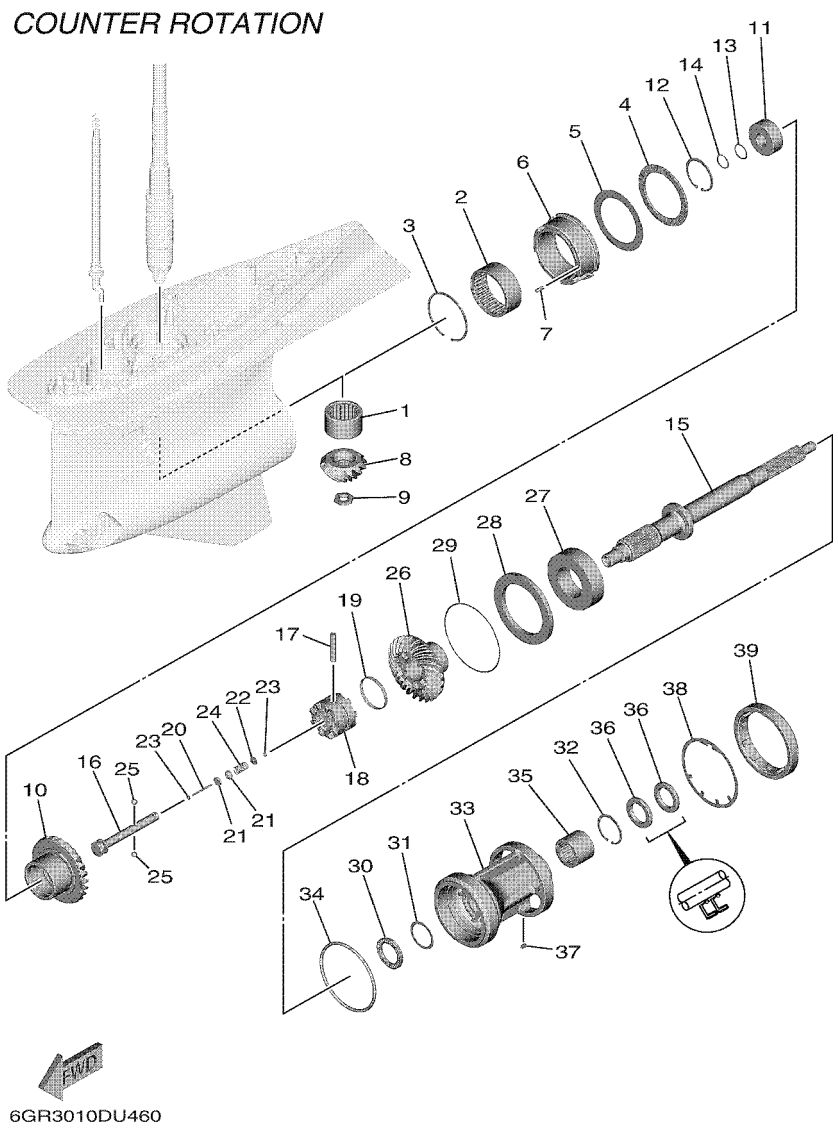

FIG. 48 LOWER CASING & DRIVE 5 — IMPULSOR E INFERIOR 5

REF. NO.	PART NO. CODIGO Nº	DESCRIPTION DESCRIPCION	6KN4	6LB4	6KP4	6LC4		REMARKS OBSERVACIONES
36	93101–37001	OIL SEAL SELLO ACEITE			2	2		
37	90282–05008	KEY, STRAIGHT CHAVETA, RECTA			1	1		
38	6GR–45383–00	WASHER, CLAW ARANDELA DE UNA			1	1		
39	6GR–45384–00	NUT TUERCA			1	1		

FIG. 49 LOWER CASING & DRIVE 6 — IMPULSOR E INFERIOR 6

COUNTER ROTATION

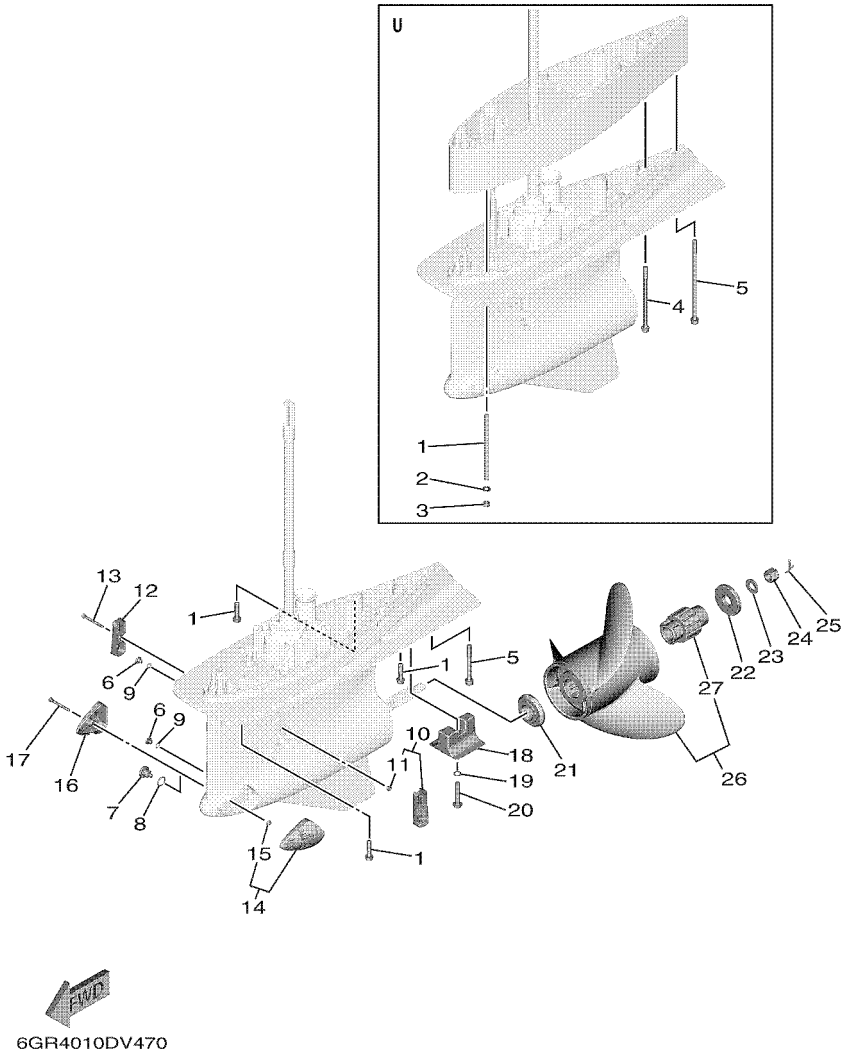

REF. NO.	PART NO. CODIGO Nº	DESCRIPTION DESCRIPCION	6KN4	6LB4	6KP4	6LC4		REMARKS OBSERVACIONES
1	90119–10024	BOLT, WITH WASHER TORNILLO CON ARANDELA			9	9		UR X(25.2") UR X(25.2")
	90116–10067	BOLT, STUD ESPARRAGO			8	8		UR U(30.2") UR U(30.2")
2	92995–10600	WASHER ARANDELA			8	8		U(30.2") U(30.2")
3	95380–10600	NUT TUERCA			8	8		U(30.2") U(30.2")
4	90119–10009	BOLT, WITH WASHER TORNILLO CON ARANDELA			1	1		U(30.2") U(30.2")
5	90110–10053	BOLT, HEXAGON SOCKET HEAD TORNILLO ALLEN			1	1		UR X(25.2") UR X(25.2")
	90110–10054	BOLT, HEXAGON SOCKET HEAD TORNILLO ALLEN			1	1		UR U(30.2") UR U(30.2")
6	90340–08003	PLUG, STRAIGHT SCREW TORNILLO, DE DRENAJE			2	2		
7	6GR–45341–00	PLUG, DRAIN TAPON, DREN			1	1		
8	93210–19123	O-RING ANILLO O			1	1		
9	93210–09165	O-RING ANILLO O			2	2		
10	6GR–45214–01	COVER, WATER INLET 1 CUBIERTA, ENTRADA AGUA 1			1	1		
11	90185–06M07	.NUT, SELF-LOCKING .TUERCA AUTOBLOCANTE			1	1		
12	6GR–45215–01	COVER, WATER INLET 2 CUBIERTA, ENTRADA AGUA 2			1	1		
13	90110–06425	BOLT, HEXAGON SOCKET HEAD TORNILLO ALLEN			1	1		
14	6KN–45224–00	COVER, WATER INLET 3 CUBIERTA, ENTRADA AGUA 3			1	1		
15	90185–06M07	.NUT, SELF-LOCKING .TUERCA AUTOBLOCANTE			1	1		
16	6KN–45225–00	COVER, WATER INLET 4 CUBIERTA, ENTRADA AGUA 4			1	1		
17	90110–06425	BOLT, HEXAGON SOCKET HEAD TORNILLO ALLEN			1	1		
18	6AW–45373–00	ANODE ANODO			1	1		
19	92990–10300	WASHER ARANDELA PLANA			1	1		
20	90105–10257	BOLT, FLANGE TORNILLO			1	1		
21	6GR–45987–00	SPACER 1 ESPACIADOR 1			1	1		
22	6GR–45997–00	SPACER 2 ESPACIADOR 2			1	1		
23	90201–19M01	WASHER, PLATE ARANDELA PLANA			1	1		
24	90171–18M04	NUT, CASTLE TUERCA ENTALLADA			1	1		
25	91490–40030	PIN. COTTER CHAVETA			1	1		

FIG. 49 LOWER CASING & DRIVE 6 — IMPULSOR E INFERIOR 6

COUNTER ROTATION

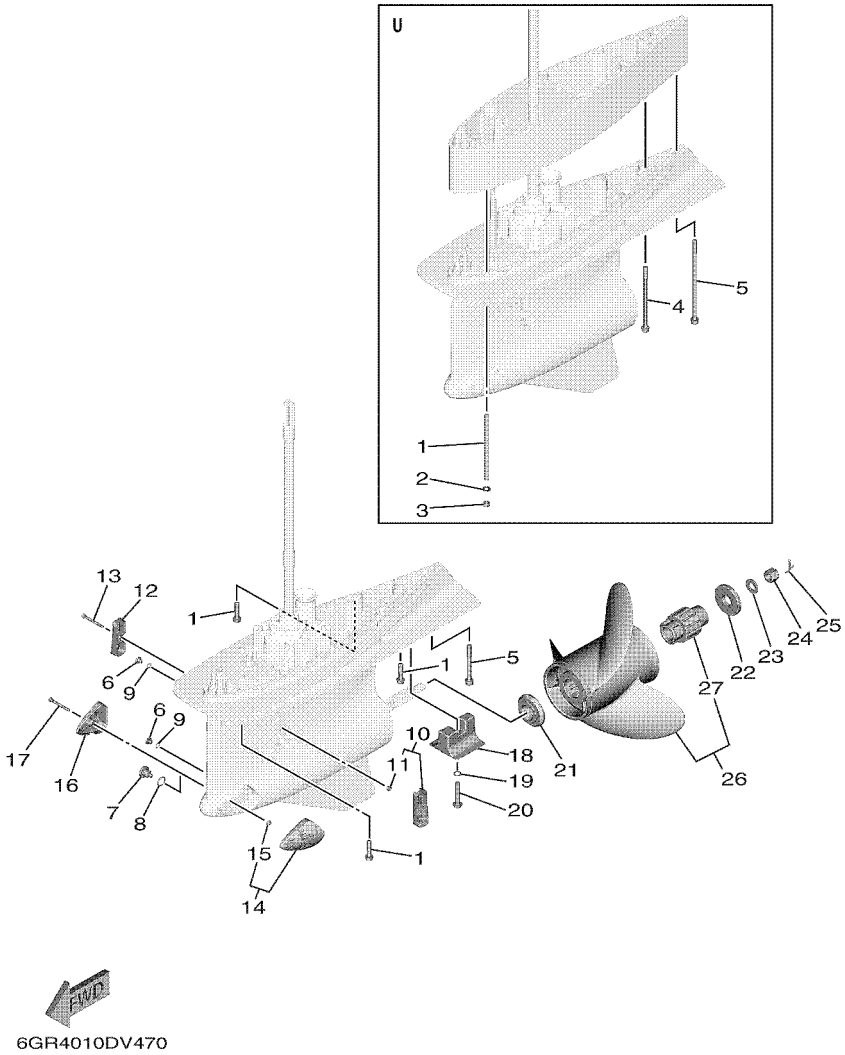

REF. NO.	PART NO. CODIGO Nº	DESCRIPTION DESCRIPCION	6KN4	6LB4	6KP4	6LC4		REMARKS OBSERVACIONES
26	6GS–45970–20	PROPELLER (3X17-1/8"X15"-YL2) PROPELA (3X17-1/8"X15"-YL2)			1	1		UR SDS 3 BLADE UR SDS 3 BLADE
	6GS–45D70–20	PROPELLER (3X16-7/8"X16"-YL2) PROPELA (3X16-7/8"X16"-YL2)			1	1		UR SDS 3 BLADE UR SDS 3 BLADE
	6KP–45938–00	PROPELLER (3X16-7/8"X16"-YL) PROPELA (3X16-7/8"X16"-YL)			1	1		UR SDS 3 BLADE UR SDS 3 BLADE
	6GS–45972–20	PROPELLER (3X16-7/8"X17"-YL2) PROPELA (3X16-7/8"X17"-YL2)			1	1		UR SDS 3 BLADE UR SDS 3 BLADE
	6KP–45970–00	PROPELLER (3X16-7/8"X17"-YL) PROPELA (3X16-7/8"X17"-YL)			1	1		UR SDS 3 BLADE UR SDS 3 BLADE
	6GS–45938–20	PROPELLER (3X16-5/8"X18"-YL2) PROPELA (3X16-5/8"X18"-YL2)			1	1		UR SDS 3 BLADE UR SDS 3 BLADE
	6KP–45936–00	PROPELLER (3X16-7/8"X18"-YL) PROPELA (3X16-7/8"X18"-YL)			1	1		UR SDS 3 BLADE UR SDS 3 BLADE
	6GS–45974–20	PROPELLER (3X16-5/8"X19"-YL2) PROPELA (3X16-5/8"X19"-YL2)			1	1		UR SDS 3 BLADE UR SDS 3 BLADE
	6GS–45936–20	PROPELLER (3X16-3/8"X20"-YL2) PROPELA (3X16-3/8"X20"-YL2)			1	1		UR SDS 3 BLADE UR SDS 3 BLADE
	6KP–45976–00	PROPELLER (3X16-5/8"X20"-YL) PROPELA (3X16-5/8"X20"-YL)			1	1		UR SDS 3 BLADE UR SDS 3 BLADE
	6GS–45976–20	PROPELLER (3X16-3/8"X21"-YL2) PROPELA (3X16-3/8"X21"-YL2)			1	1		UR SDS 3 BLADE UR SDS 3 BLADE
	6KP–45978–00	PROPELLER (3X16-3/8"X21"-YL) PROPELA (3X16-3/8"X21"-YL)			1	1		UR SDS 3 BLADE UR SDS 3 BLADE
	6GS–45934–20	PROPELLER (3X16-1/8"X22"-YL2) PROPELA (3X16-1/8"X22"-YL2)			1	1		UR SDS 3 BLADE UR SDS 3 BLADE
	6KP–45934–00	PROPELLER (3X16-3/8"X22"-YL) PROPELA (3X16-3/8"X22"-YL)			1	1		UR SDS 3 BLADE UR SDS 3 BLADE
	6GS–45978–20	PROPELLER (3X16-1/8"X23"-YL2) PROPELA (3X16-1/8"X23"-YL2)			1	1		UR SDS 3 BLADE UR SDS 3 BLADE
	6KP–45932–00	PROPELLER (3X16-1/8"X23"-YL) PROPELA (3X16-1/8"X23"-YL)			1	1		UR SDS 3 BLADE UR SDS 3 BLADE
	6GS–45932–20	PROPELLER (3X16"X24"-YL2) PROPELA (3X16"X24"-YL2)			1	1		UR SDS 3 BLADE UR SDS 3 BLADE
	6KP–45972–00	PROPELLER (3X16-1/8"X24"-YL) PROPELA (3X16-1/8"X24"-YL)			1	1		UR SDS 3 BLADE UR SDS 3 BLADE
	6GS–45930–20	PROPELLER (3X16"X25"-YL2) PROPELA (3X16"X25"-YL2)			1	1		UR SDS 3 BLADE UR SDS 3 BLADE
	6KP–45974–00	PROPELLER (3X16-1/8"X25"-YL) PROPELA (3X16-1/8"X25"-YL)			1	1		UR SDS 3 BLADE UR SDS 3 BLADE
	6GS–45D72–20	PROPELLER (3X16"X26"-YL2) PROPELA (3X16"X26"-YL2)			1	1		UR SDS 3 BLADE UR SDS 3 BLADE
	6KP–45930–00	PROPELLER (3X16-1/8"X26"-YL) PROPELA (3X16-1/8"X26"-YL)			1	1		UR SDS 3 BLADE UR SDS 3 BLADE
	6GS–45D74–20	PROPELLER (3X16"X27"-YL2) PROPELA (3X16"X27"-YL2)			1	1		UR SDS 3 BLADE UR SDS 3 BLADE
27	6GR–45C81–10	.DAMPER RUBBER, PROPELLER 1 .AMORTIGUADOR PROPELA 1			1	1		

FIG. 50 OPTIONAL PARTS 1 — PARTES OPCIONALES 1

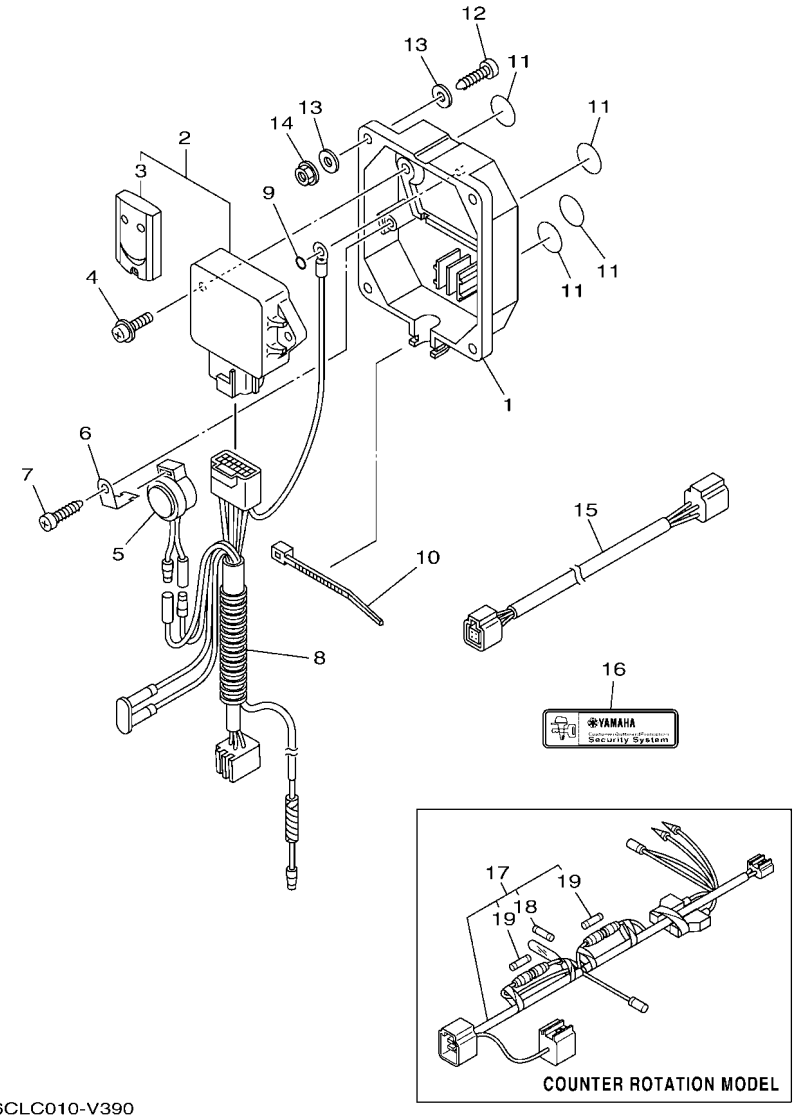

6CLC010-V390

REF. NO.	PART NO. CODIGO Nº	DESCRIPTION DESCRIPCION	6KN4	6LB4	6KP4	6LC4		REMARKS OBSERVACIONES
1	6Y8–86267–00	CASE COMPLETE 1 CAJA COMPLETA 1	1					FOR CAR FOR CAR
2	6Y8–86260–12	REMOTE CONTROL UNIT ASSY UNIDAD DE CONTROL REMOTO COMPL	1					UR 315MHz,FOR CAR UR 315MHz,FOR CAR
	6Y8–86260–03	REMOTE CONTROL UNIT ASSY UNIDAD DE CONTROL REMOTO COMPL	1					UR 433MHz,FOR CAR UR 433MHz,FOR CAR
3	6AA–86261–22	.XMTR. COMP. .XMTR. COMP.	2					UR FOR 315MHz UR FOR 315MHz
	6AA–86261–01	.XMTR. COMP. .XMTR. COMP.	2					UR FOR 433MHz UR FOR 433MHz
4	97980–06216	SCREW, WITH WASHER TORNILLO, CON ARANDELA	2					FOR CAR FOR CAR
5	6X4–83383–00	BUZZER ZUMBADOR	1					FOR CAR FOR CAR
6	6X4–83386–00	STAY, BUZZER TIRANTE DE ZUMBADOR	1					FOR CAR FOR CAR
7	97780–60620	SCREW, TAPPING TORNILLO DE CABEZA DE CONO ACH	1					FOR CAR FOR CAR
8	6Y8–82509–10	WIRE, SUB LEAD CABLE SUBCONDUCTOR	1					FOR CAR FOR CAR
9	93210–04279	O-RING ANILLO O	1					FOR CAR FOR CAR
10	90465–11M10	CLAMP BRIDA	1					FOR CAR FOR CAR
11	6Y8–8454G–00	PATCH 1 PARCHE 1	4					FOR CAR FOR CAR
12	90167–06M00	SCREW, TAPPING TORNILLO DE ROSCA HEMBRA	4					UR FOR CAR UR FOR CAR
	97880–06035	SCREW, PAN HEAD TORNILLO DE CABEZA CON PLANA	4					UR FOR CAR UR FOR CAR
13	90201–06M30	WASHER, PLATE ARANDELA PLANA	8					FOR CAR FOR CAR
14	95780–06300	NUT, FLANGE TUERCA	4					FOR CAR FOR CAR
15	6Y8–82521–11	2FT PIGTAIL BUS CABLE CONDUCTOR	1					FOR CAR FOR CAR
16	6Y8–48277–00	STICKER 1 ETIQUETTE 1	4					FOR CAR FOR CAR
17	6Y8–81315–04	LEAD WIRE ASSY CABLE CONDUCTOR COMPLETO			1			AP FOR CAR AP FOR CAR
18	6TA–82151–01	.FUSE(5A) .FUSIBLE (5A)			1			
19	6Y8–82151–00	.FUSE(5A) .FUSIBLE (5A)			2			

FIG. 51 OPTIONAL PARTS 2 — PARTES OPCIONALES 2

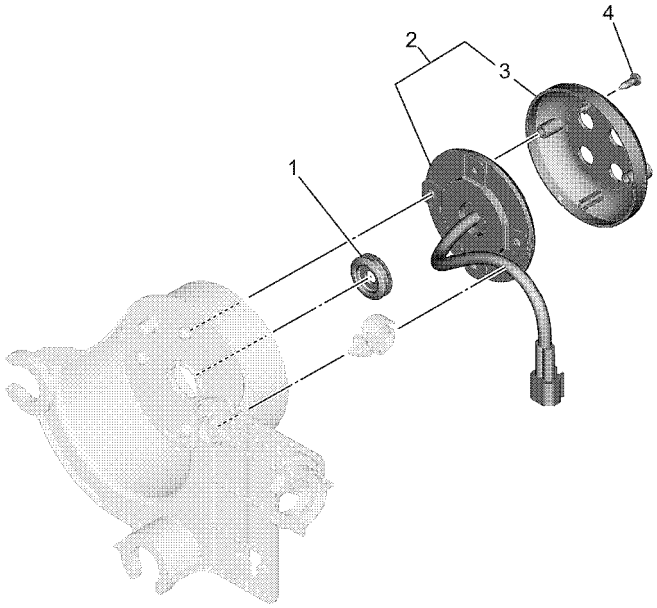

6KN210EDX450

REF. NO.	PART NO. CODIGO Nº	DESCRIPTION DESCRIPCION	6KN4	6LB4	6KP4	6LC4		REMARKS OBSERVACIONES
1	90480–20006	GROMMET TAPON	1	1	1	1		
2	6KA–6810C–00	LED LIGHT ASSY ENSAMBLAJE DE LUCES LED	1	1	1	1		
3	6KA–84516–10	.COVER, TAILLIGHT .CUBIERTA DE LUZ DE COLA	1	1	1	1		
4	97780–40125	SCREW, TAPPING TORNILLO DE CABEZA DE CONO ACH	2	2	2	2		

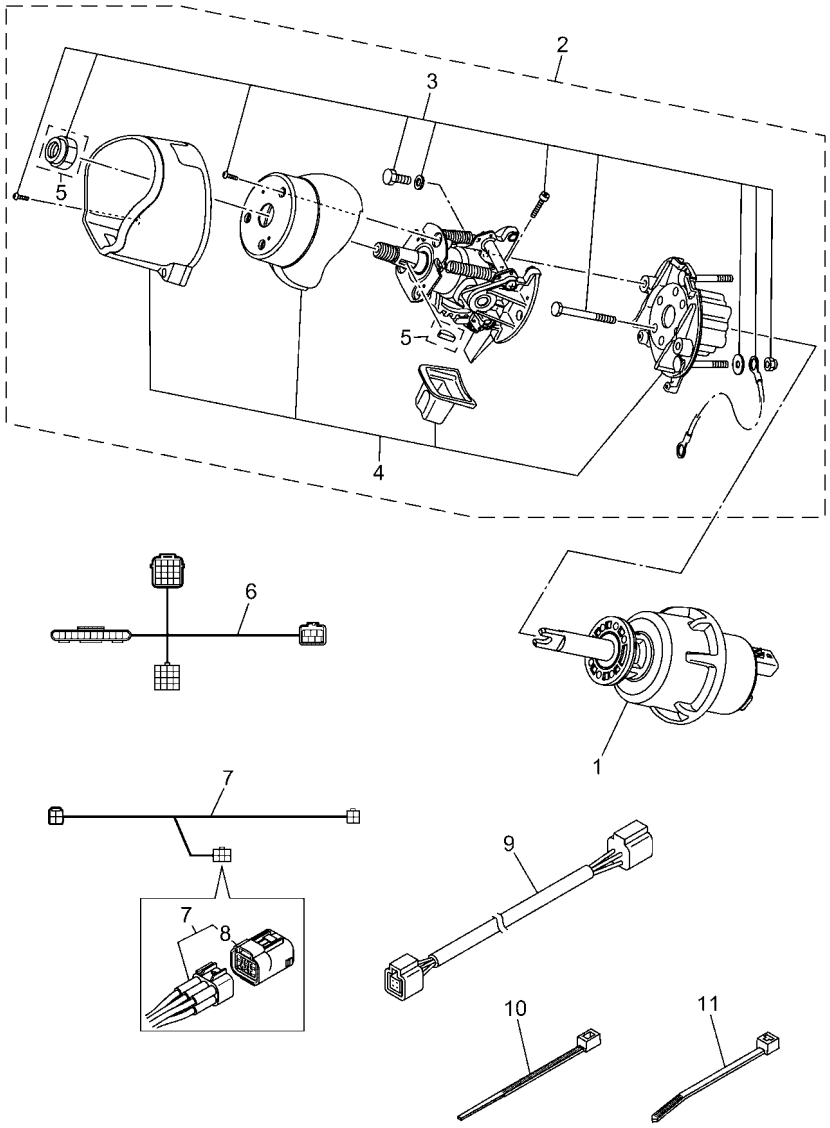

6GR6200-X500

FIG. 52 OPTIONAL PARTS 3 — PARTES OPCIONALES 3

REF. NO.	PART NO. CODIGO Nº	DESCRIPTION DESCRIPCION	6KN4	6LB4	6KP4	6LC4		REMARKS OBSERVACIONES
1	6GR–615A0–10	HELM UNIT ASSY ASAMBLEA DE UNIDAD DE DIRECCIO	1	1				ASK TO MARINE DIV ASK TO MARINE DIV
2	6GR–6154A–01	TILT HELM UNIT COLUMNA DE DIRECCION COMPLETA	1	1				ASK TO MARINE DIV ASK TO MARINE DIV
3	6GR–42402–01	.REPAIR KIT, 1 .KIT DE REPARACION 1	1	1				
4	6GR–42403–00	.REPAIR KIT, 2 .KIT DE REPARACION 2	1	1				
5	6X9–4240A–00	.REPAIR KIT, 9 .KIT DE REPARACION 9	1	1				
6	6GR–8258A–11	HELM HARNESS 0.9M-3FT EXTENSION, ARNES DE CABLES			2	2		MULTIPLE ENGINES (MAIN ST) MULTIPLE ENGINES (MAIN ST)
7	6GR–81115–00	SCU LINK HARNESS 1.5M-5FT CONDUCTOR DE CABLE			2	2		UR PORT/STBD ENGINE UR PORT/STBD ENGINE
	6GR–81115–10	SCU LINK HARNESS 3.0M-10F CONDUCTOR DE CABLE			2	2		UR PORT/STBD ENGINE UR PORT/STBD ENGINE
8	6Y8–85371–01	.END OF LINE RESISTOR .RESISTENCIA DE FIN DE LINEA			1	1		
9	6Y8–82521–01	1FT PIGTAIL BUS CABLE CONDUCTOR			1	1		UR UR
	6Y8–82521–11	2FT PIGTAIL BUS CABLE CONDUCTOR			1	1		UR UR
	6Y8–82521–21	3FT PIGTAIL BUS CABLE CONDUCTOR			1	1		UR UR
	6Y8–82521–31	6FT PIGTAIL BUS CABLE CONDUCTOR			1	1		UR UR
	6Y8–82521–41	9FT PIGTAIL BUS CABLE CONDUCTOR			1	1		UR UR
	6Y8–82521–51	12FT PIGTAIL BUS CABLE CONDUCTOR			1	1		UR UR
10	90464–66001	CLAMP BRIDA			4	4		
11	90465–13M18	CLAMP BRIDA			2	2		

FIG. 53 OPTIONAL PARTS 4 — PARTES OPCIONALES 4

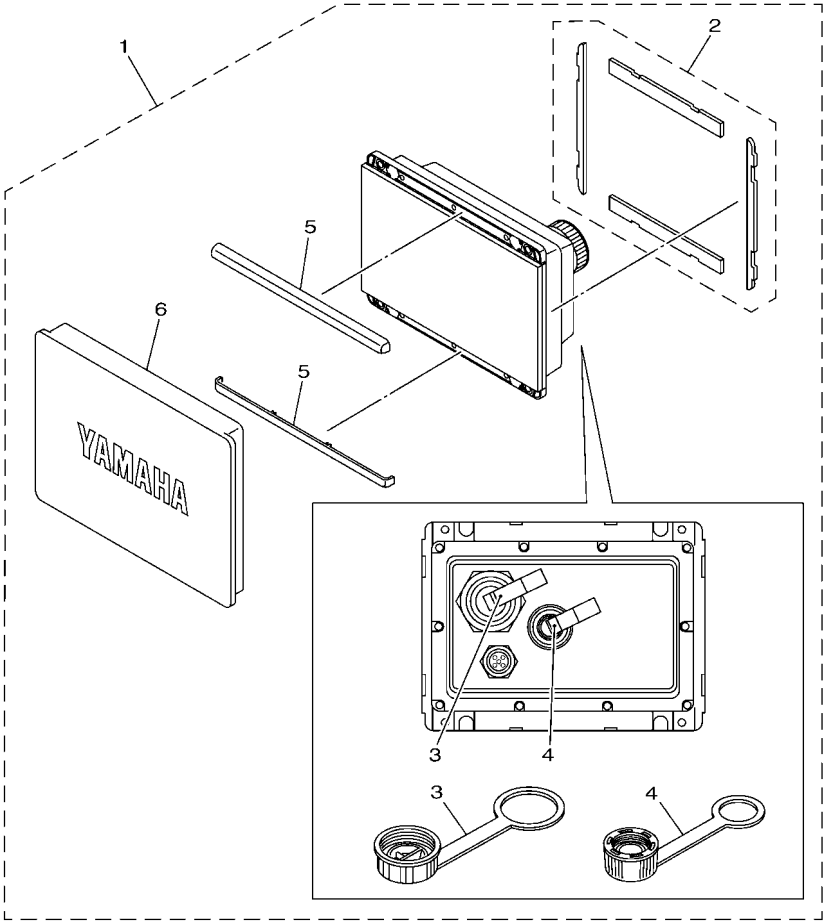

6ALH300-V410

REF. NO.	PART NO. CODIGO Nº	DESCRIPTION DESCRIPCION	6KN4	6LB4	6KP4	6LC4		REMARKS OBSERVACIONES
1	6YM–83710–18	CL5 DISPLAY (W/O WIFI) CL5 PANTALLA (W/O WIFI)	1					FOR CAR WITHOUT Wi-Fi FOR CAR WITHOUT Wi-Fi
2	6YM–22480–00	.SEAL ASSY .JUEGO DE JUNTO	1					
3	6YM–83956–00	.CAP 1 .TAPA 1	1					
4	6YD–83957–00	.CAP 2 .TAPA 2	1					
5	6YM–83512–00	.RIM .ANILLO	2					
6	6YM–87278–00	.COVER, METER .CUBIERTA DE MEDIDOR	1					

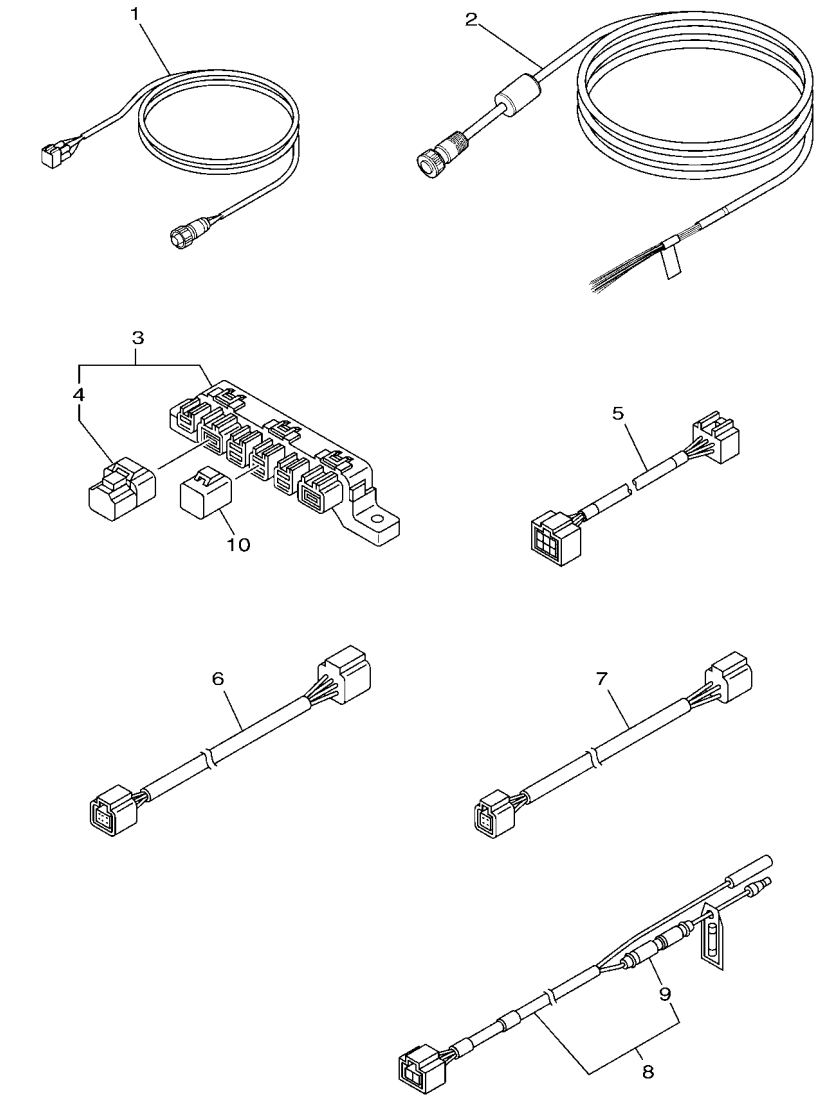

6GR5200-W520

FIG. 54 OPTIONAL PARTS 5 — PARTES OPCIONLES 5

REF. NO.	PART NO. CODIGO Nº	DESCRIPTION DESCRIPCION	6KN4	6LB4	6KP4	6LC4		REMARKS OBSERVACIONES
1	6YM–83553–01	CONVERSION HARNESS CABLE CONDUCTOR	1					FOR CAR FOR CAR
2	6YD–8356N–00	WIRE, LEAD CABLE CONDUCTOR	1					FOR CAR FOR CAR
3	6Y8–81920–01	MULTI HUB ASSY TERMINAL COMPLETO	1					FOR CAR FOR CAR
4	6Y8–85371–01	.END OF LINE RESISTOR .RESISTENCIA DE FIN DE LINEA	1					
5	6Y9–83553–00	WIRE, LEAD CABLE CONDUCTOR	1					FOR CAR FOR CAR
6	6Y8–82553–01	1FT MAIN BUS CABLE	1					FOR CAR FOR CAR
7	6Y8–82521–31	6FT PIGTAIL BUS CABLE CONDUCTOR	1					FOR CAR FOR CAR
8	6Y8–83553–02	8FT POWER WIRE CABLE CONDUCTOR	1					FOR CAR FOR CAR
9	6G1–82151–01	.FUSE (10A) .FUSIBLE (10A)	1					
10	6Y8–82582–11	CAP 1 (4PIN) TAPA 1 (4P)	2					FOR CAR FOR CAR

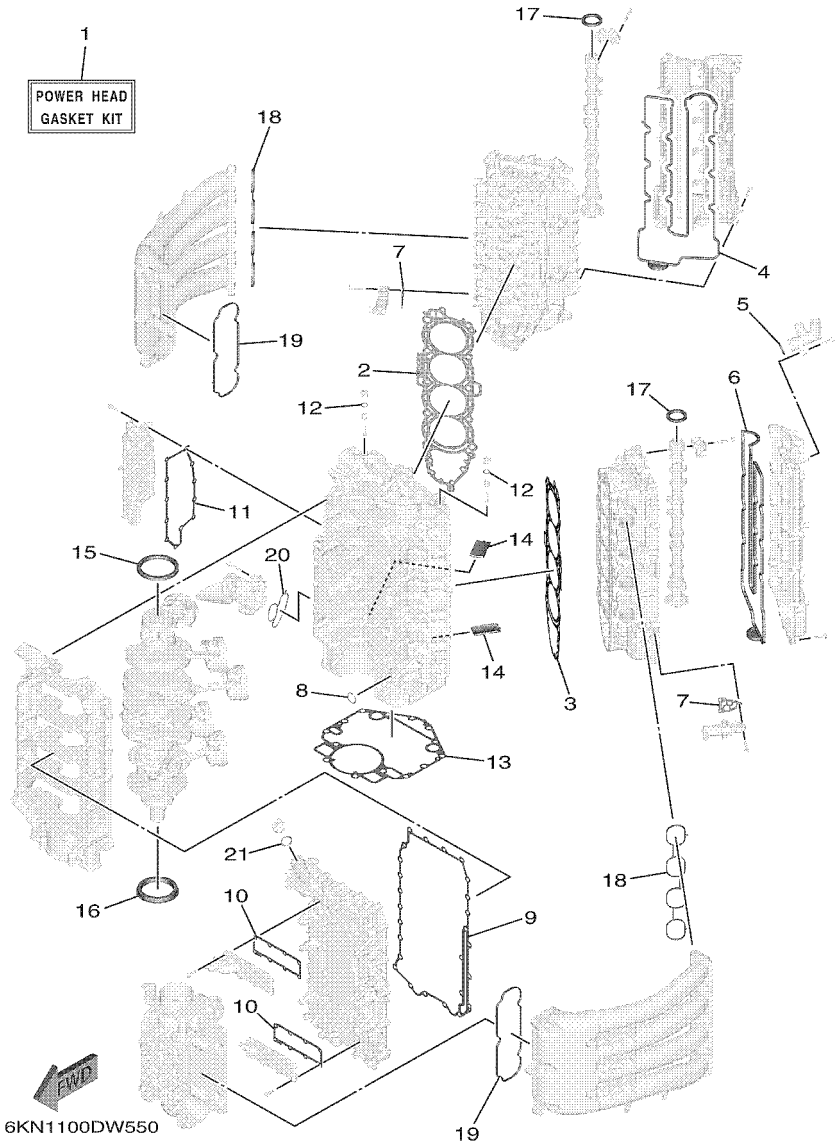

FIG. 55 REPAIR KIT 1 — ESTUCHE REPARATION 1

REF. NO.	PART NO. CODIGO Nº	DESCRIPTION DESCRIPCION	6KN4	6LB4	6KP4	6LC4		REMARKS OBSERVACIONES
1	6KN–W0001–01	POWER HEAD GASKET KIT JUEGO DE EMPAQUE DE MOTOR	1	1	1	1		
2	6KN–11181–00	.GASKET, CYLINDER HEAD 1 .JUNTA, DE CULATA 1	1	1	1	1		
3	6KN–11182–00	.GASKET, CYLINDER HEAD 2 .EMPAQUE CULATA DE CILINDRO 2	1	1	1	1		
4	6GR–11193–00	.GASKET, HEAD COVER 1 .EMPAQUE	1	1	1	1		
5	93210–28646	.O-RING .ANILLO O	1	1	1	1		
6	6GR–11194–00	.GASKET, HEAD COVER 2 .EMPAQUE DE TAPA DE CULATA 2	1	1	1	1		
7	6CB–1242F–00	.GASKET, FILTER .EMPAQUE DE FILTRO	2	2	2	2		
8	93210–26658	.O-RING .ANILLO O	1	1	1	1		
9	6GR–15451–01	.GASKET, CRANKCASE COVER 1 .EMPAQ DE CUBIERTA DE CARTER	1	1	1	1		
10	6GR–1131B–00	.GASKET, COVER .EMPAQUE DE CUBIERTA	2	2	2	2		
11	6GR–15353–00	.GASKET, DRAIN .JUNTA DE DRENAJE	1	1	1	1		
12	93210–13M63	.O-RING .ANILLO O	2	2	2	2		
13	6GR–11351–01	.GASKET, CYLINDER .JUNTA, DE CILINDRO	1	1	1	1		
14	6GR–14664–01	.GROMMET, WATER SHUT .TAPON	2	2	2	2		
15	93102–90004	.OIL SEAL .SELLO ACEITE	1	1	1	1		
16	93102–85010	.OIL SEAL .SELLO ACEITE	1	1	1	1		
17	93102–38008	.OIL SEAL .SELLO ACEITE	2	2	2	2		
18	6GR–13645–00	.GASKET, MANIFOLD 1 .EMPAQUE	2	2	2	2		
19	6GR–13646–00	.GASKET, MANIFOLD 2 .EMPAQ. DE MULTIPLE 2	2	2	2	2		
20	6GR–13477–00	.GASKET .EMPAQUE	1	1	1	1		
21	93210–24M79	.O-RING .ANILLO O	1	1	1	1		

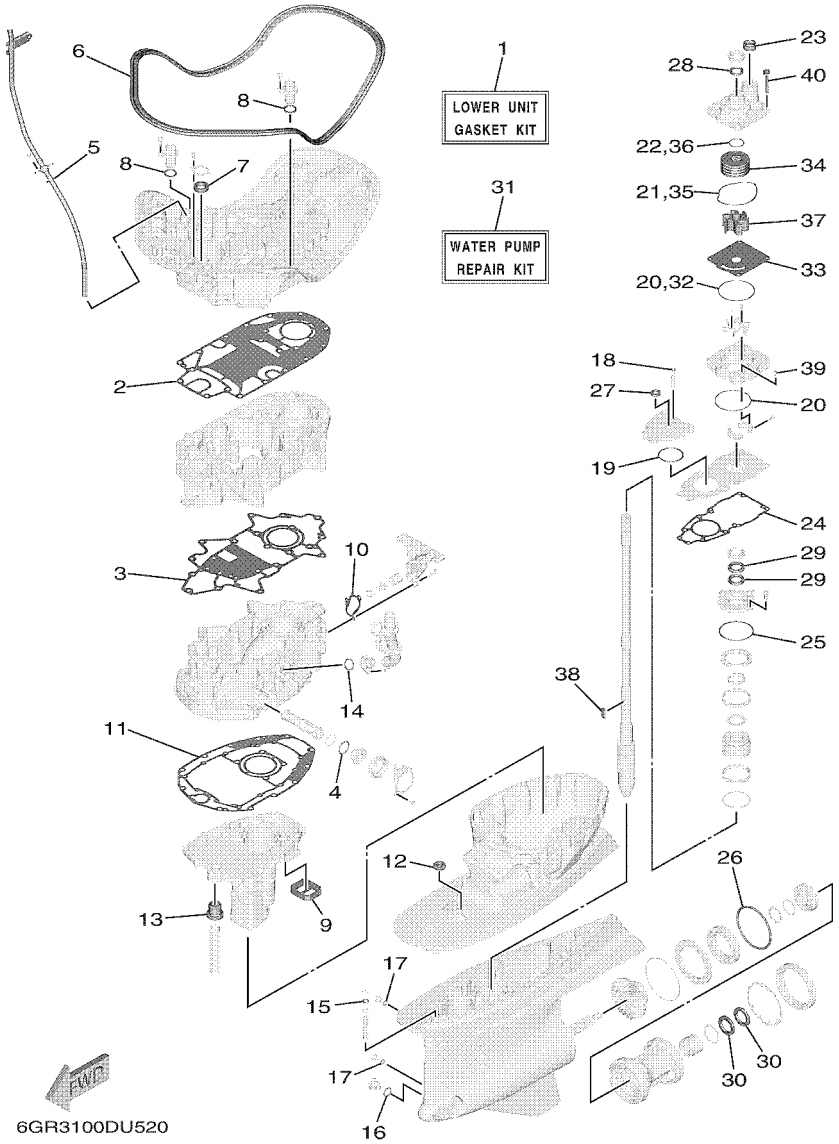

FIG. 56 REPAIR KIT 2 — ESTUCHE REPARATION 2

REF. NO.	PART NO. CODIGO Nº	DESCRIPTION DESCRIPCION	6KN4	6LB4	6KP4	6LC4		REMARKS OBSERVACIONES
1	6GR–W0001–23	LOWER UNIT GASKET KIT JUEGO DE EMPAQUE UNIDAD INFER.	1	1	1	1		
2	6GR–15312–01	.GASKET, OIL PAN .EMPAQ BANDEJA DE ACEITE	1	1	1	1		
3	6GR–1531C–01	.GASKET, OIL PAN 2 .EMPAQ BANDEJA DE ACEITE 2	1	1	1	1		
4	93210–34633	.O-RING .ANILLO O	1	1	1	1		
5	93210–19MJ3	.O-RING .ANILLO O	1	1	1	1		
6	6GR–42716–00	.RUBBER SEAL 1 .SELLO DE GOMA 1	1	1	1	1		
7	93102–26004	.OIL SEAL .SELLO ACEITE	1	1	1	1		
8	6GR–44366–01	.DAMPER, WATER SEAL 2 .GOMA DEL SELLO DE AGUA 2	2	2	2	2		
9	6GR–45127–00	.SEAL .SELLO DE GOMA	1	1	1	1		
10	6EK–12435–A0	.GASKET .EMPAQUE	1	1	1	1		
11	6GR–45113–00	.GASKET, UPPER CASING .EMPAQUE	1	1	1	1		
12	6GR–44521–00	.SEAL .SELLO DE GOMA	1	1	1	1		
13	6GR–44367–01	.DAMPER, WATER SEAL 3 .GOMA DEL SELLO DE AGUA 3	1	1	1	1		
14	6GR–44366–01	.DAMPER, WATER SEAL 2 .GOMA DEL SELLO DE AGUA 2	2	2	2	2		
15	93210–10010	.O-RING .ANILLO O	1	1	1	1		
16	93210–19123	.O-RING .ANILLO O	1	1	1	1		
17	93210–09165	.O-RING .ANILLO O	2	2	2	2		
18	93210–07100	.O-RING .ANILLO O	1	1	1	1		
19	93210–64488	.O-RING .ANILLO O	1	1	1	1		
20	93210–97690	.O-RING .ANILLO O	2	2	2	2		
21	93211–08001	.O-RING .ANILLO O	1	1	1	1		
22	93210–37160	.O-RING .ANILLO O	1	1	1	1		
23	6GR–44365–01	.DAMPER, WATER SEAL 1 .HULE DE SELLO DE AGUA 1	1	1	1	1		
24	6GR–44315–00	.GASKET, WATER PUMP .EMPAQUE	1	1	1	1		
25	93210–89535	.O-RING .ANILLO O	1	1	1	1		
26	93211–26001	.O-RING .ANILLO O	1	1	1	1		
27	93106–14001	.OIL SEAL .SELLO ACEITE	1	1	1	1		

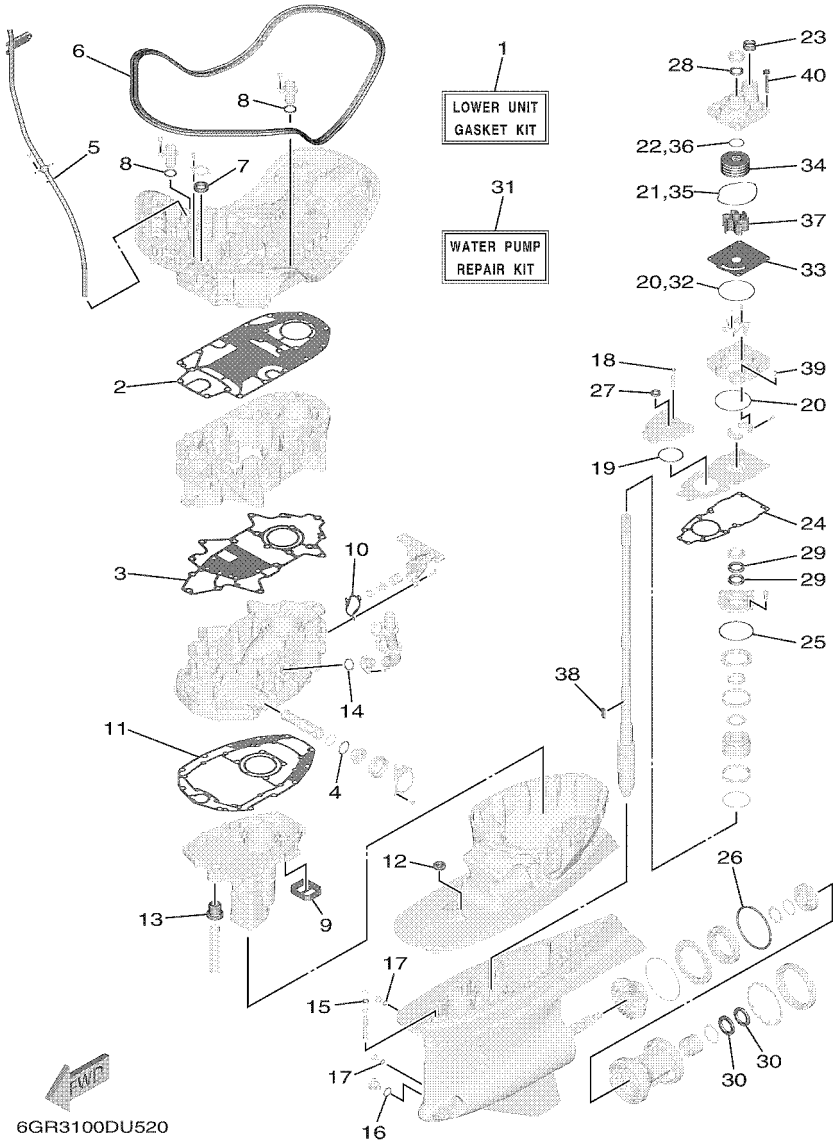

FIG. 56 REPAIR KIT 2 — ESTUCHE REPARATION 2

REF. NO.	PART NO. CODIGO Nº	DESCRIPTION DESCRIPCION	6KN4	6LB4	6KP4	6LC4		REMARKS OBSERVACIONES
28	93109–26001	.OIL SEAL .SELLO ACEITE	1	1	1	1		
29	93101–30037	.OIL SEAL .SELLO ACEITE	2	2	2	2		
30	93101–37001	.OIL SEAL .SELLO ACEITE	2	2	2	2		
31	6GR–W0078–01	WATER PUMP REPAIR KIT ESTUCHE REPARACION BOMBA AGUA	1	1	1	1		
32	93210–97690	.O-RING .ANILLO O	1	1	1	1		
33	6GR–44323–00	.OUTER PLATE, CARTRIDGE .PLACA EXTERIOR DEL CARTUCHO	1	1	1	1		
34	6GR–44322–00	.INSERT, CARTRIDGE .CARTUCHO	1	1	1	1		
35	93211–08001	.O-RING .ANILLO O	1	1	1	1		
36	93210–37160	.O-RING .ANILLO O	1	1	1	1		
37	6GR–44352–00	.IMPELLER .IMPULSOR	1	1	1	1		
38	6AW–44336–00	.KEY .CHAVETA	1	1	1	1		
39	93606–12019	.PIN, DOWEL .PASADOR DE CLAVIJA	2	2	2	2		
40	90119–08196	.BOLT, WITH WASHER .TORNILLO CON ARANDELA	4	4	4	4		

NUMERICAL INDEX
INDICE NUMERICO

PART NO. CODIGO Nº	REF. NO.
6KN–11000–00	3 – 1
6KN–11110–00	5 – 2
6KN–11120–00	5 – 12
6DA–11133–10	5 – 3
	5 – 13
6GR–11135–00	6 – 2
6GR–11136–00	6 – 10
6KN–11181–00	5 – 27
	55 – 2
6KN–11182–00	5 – 28
	55 – 3
6GR–11186–01	22 – 23
6GR–11187–01	22 – 29
6GR–11191–00–9S	6 – 1
6GR–11192–00–9S	6 – 6
6GR–11193–00	6 – 4
	55 – 4
6GR–11194–00	6 – 12
	55 – 6
6G8–11197–A0	3 – 38
	13 – 6
6G8–11197–B0	14 – 3
6ML–11301–00	5 – 21
6KN–11313–00	29 – 15
6GR–1131B–00	3 – 20
	55 – 10
6G8–11325–00	1 – 6
	1 – 10
	1 – 11
	3 – 37
	13 – 8
	14 – 5
6ML–11325–00	1 – 1
	5 – 22
67F–11328–01	5 – 23
6AW–1132P–00	1 – 4
	3 – 31
6GR–11351–01	3 – 43
	55 – 13
6GR–1135A–00	3 – 41
6GR–11372–00	6 – 7
6GR–11411–01	4 – 1
6GR–11416–00	4 – 11
6GR–11416–10	4 – 11
6GR–11416–20	4 – 11
6GR–11416–30	4 – 11
6GR–11417–00	4 – 12
6GR–11417–10	4 – 12

PART NO. CODIGO Nº	REF. NO.
6GR–11417–20	4 – 12
6GR–11417–30	4 – 12
6GR–11426–00	4 – 15
6CB–11426–03	4 – 13
6GR–11427–00	4 – 16
6CB–11427–03	4 – 14
6GR–11567–00	9 – 6
6P2–11590–05	9 – 16
6GR–115A0–00	9 – 5
6GR–11603–00	4 – 20
6KN–11631–00	4 – 19
6GR–11633–00	4 – 21
6GR–11634–00	4 – 22
63P–11654–10	4 – 18
6GR–11656–00	4 – 23
6GR–11656–10	4 – 23
6GR–11656–20	4 – 23
6GR–11927–00	6 – 19
6GR–12111–00	8 – 1
6CB–12113–00	8 – 4
51Y–12119–00	8 – 7
6KN–12121–00	8 – 2
6GR–12145–00	8 – 8
6GR–12145–10	8 – 8
6GR–12145–20	8 – 8
6GR–12145–30	8 – 8
6GR–12145–40	8 – 8
6GR–12145–50	8 – 8
6GR–12145–60	8 – 8
6GR–12153–00	8 – 8
6GR–12153–10	8 – 8
6GR–12153–20	8 – 8
6GR–12153–30	8 – 8
6GR–12153–40	8 – 8
6GR–12153–50	8 – 8
6GR–12153–60	8 – 8
6GR–12153–70	8 – 8
6GR–12153–80	8 – 8
6GR–12153–90	8 – 8
6GR–12153–A0	8 – 8
6GR–12153–B0	8 – 8
6GR–12153–C0	8 – 8
6GR–12153–D0	8 – 8
6GR–12153–E0	8 – 8
6GR–12153–F0	8 – 8
6GR–12153–G0	8 – 8
6GR–12153–H0	8 – 8
6GR–12153–J0	8 – 8

PART NO. CODIGO Nº	REF. NO.
6GR–12153–K0	8 – 8
6GR–12153–L0	8 – 8
6GR–12153–M0	8 – 8
6GR–12153–N0	8 – 8
6GR–12153–P0	8 – 8
6GR–12153–R0	8 – 8
6GR–12153–S0	8 – 8
6GR–12153–T0	8 – 8
6KN–12171–00	9 – 1
6KN–12172–00	9 – 3
6KN–12181–00	9 – 2
6KN–12182–00	9 – 4
6GR–12199–00	4 – 8
6GR–12210–00	9 – 12
6GR–12230–00	9 – 13
6GR–12411–00	1 – 5
	3 – 33
66M–12411–01	1 – 3
	3 – 25
6H3–12411–20	1 – 2
	3 – 17
688–12412–00	3 – 26
6GR–12412–00	3 – 34
6H3–12412–10	3 – 18
6GR–12413–00	3 – 35
6G5–12416–00	43 – 22
6KN–12417–00–9S	3 – 22
6GR–1241B–00–9S	3 – 29
6CB–1242F–00	6 – 15
	55 – 7
6EK–12435–A0	43 – 27
	56 – 10
6GR–12439–00	18 – 18
6GR–1243A–00	7 – 8
6GR–1243E–00	7 – 9
6GR–1243F–00	43 – 28
6GR–1244H–00	7 – 13
6GR–12451–00	44 – 18
	47 – 18
6GR–1246A–00	43 – 21
6KN–12481–00	14 – 19
6GR–12491–00	42 – 12
6KN–12535–00	20 – 15
6KN–12551–00	7 – 6
6KN–12576–00	7 – 1
6KN–12577–00	29 – 19
6KN–12578–00	29 – 20
6KN–12579–00	7 – 2

PART NO. CODIGO Nº	REF. NO.
6GR–1257A–01	43 – 29
6GR–12581–00	43 – 30
6R3–12581–00	29 – 16
6KN–12582–00	29 – 17
6R3–12583–00	29 – 18
6GR–12584–00	40 – 19
6KN–12588–00	7 – 16
6KN–12589–00	7 – 17
6GR–12594–00	7 – 12
6GR–12645–00	9 – 8
6GR–12651–00	20 – 9
6GR–12653–01	20 – 12
6GR–12659–00	20 – 14
6GR–13016–00	18 – 7
6GR–13160–09	18 – 25
6GR–13188–00	4 – 4
6GR–13300–01	12 – 1
6GR–13411–00	1 – 8
	43 – 15
6GR–13437–61	20 – 27
N26–13440–04	1 – 9
	12 – 3
6GR–13446–00	12 – 5
67F–13448–00	2 – 18
6GR–13473–00	12 – 11
6GR–13477–00	12 – 6
	55 – 20
6GR–13490–00	12 – 10
6GR–13556–00	11 – 4
68V–13577–01	15 – 18
6CB–13593–00	15 – 15
6GR–13593–00	15 – 9
6GR–13641–00	10 – 7
63P–13643–00	11 – 9
6GR–13645–00	10 – 8
	55 – 18
6GR–13646–00	10 – 9
	55 – 19
6GR–13711–00	11 – 3
6GR–13716–00	15 – 16
6KN–13750–01	11 – 1
6GR–13751–01	11 – 2
6GR–13761–00	18 – 26
6GR–13781–00	15 – 5
6KN–13898–00	11 – 5
6GR–13910–00	18 – 17
6GR–13938–00	15 – 8
6GR–14197–00	15 – 17

PART NO. CODIGO Nº	REF. NO.
6GR–14295–00	18 – 22
6GR–14296–00	18 – 23
6AW–1441J–01	10 – 3
6KN–14440–00	10 – 1
6FM–14562–00	15 – 14
6GR–14567–00	15 – 19
6KN–14613–00	13 – 3
6KN–14615–00–9S	13 – 1
6KN–14623–00	13 – 4
6KN–14625–00–9S	13 – 2
6KN–14635–10–9S	14 – 1
6KN–14643–00	13 – 5
6KN–14645–10–9S	14 – 2
6KN–14656–00–9S	14 – 9
6GR–14664–01	3 – 44
	55 – 14
6GR–14711–01	41 – 1
6GR–14753–00	40 – 26
6KN–15109–00–9S	3 – 2
6P2–15187–00	3 – 7
6GR–15311–01	43 – 8
6GR–15312–01	43 – 1
	56 – 2
6GR–15316–01	43 – 20
6GR–1531A–00	10 – 12
6KN–1531A–10	10 – 13
6GR–1531B–01	43 – 2
6GR–1531C–01	43 – 3
	56 – 3
6GR–15351–00	43 – 12
6GR–15353–00	3 – 27
	55 – 11
6GR–15362–00	43 – 16
6G8–15363–00	12 – 8
6GR–15377–00	43 – 17
6KN–15411–01–9S	3 – 11
6GR–15413–01–9S	3 – 24
6GR–15414–01–9S	3 – 16
6GR–15423–00–9S	3 – 19
6GR–15451–01	3 – 13
	55 – 9
6KN–2153A–00	2 – 25
6KN–2153B–00	2 – 26
6GR–21841–00	15 – 13
6GR–22472–01	38 – 28
6YM–22480–00	53 – 2
6GR–23113–00	39 – 48
6GR–2318F–00	42 – 8

PART NO. CODIGO Nº	REF. NO.
6GR–2318K–00	26 – 9
6GR–24113–00	15 – 22
6GR–2415H–00	15 – 23
6GR–2415H–10	15 – 23
6GR–24196–00	15 – 10
6GR–2419A–00	15 – 11
6GR–24217–00	17 – 11
6GR–24218–00	15 – 4
6GR–24220–03	15 – 1
6GR–24220–12	15 – 1
6GR–24223–00	15 – 2
6GR–24224–01	15 – 3
6GR–24251–00	18 – 5
6AW–24300–01	17 – 8
	18 – 8
	18 – 13
6P2–24300–01	16 – 38
6AW–24300–11	15 – 21
	17 – 7
	18 – 11
6Y2–24307–52	19 – 2
6GR–24311–00	16 – 3
6GR–24312–01	16 – 16
6GR–24313–00	17 – 1
6GR–24314–00	17 – 2
6GR–24315–00	17 – 3
6GR–24316–00	17 – 4
6GR–24317–10	17 – 5
6GR–24321–01	16 – 19
6GR–24322–00	16 – 34
6GR–24323–00	16 – 37
6GR–24324–00	16 – 40
6GR–24325–01	16 – 44
6E5–24351–51	16 – 4
	19 – 4
6AW–24360–02	19 – 1
6Y2–24360–60	19 – 6
6GR–24376–00	7 – 5
6AW–24377–01	16 – 2
688–24378–00	14 – 18
6E5–24378–00	16 – 17
6GR–24378–10	29 – 23
6E5–24379–00	42 – 9
6GR–243A1–00	18 – 1
6KN–243A1–00	18 – 4
6GR–243A2–00	18 – 2
6KN–243A2–00	18 – 12
6GR–243A3–00	18 – 3

NUMERICAL INDEX
INDICE NUMERICO

PART NO. CODIGO Nº	REF. NO.
6GR–24408–01	17 – 10
6R5–24408–10	16 – 35
6GR–24410–02	16 – 22
6GR–2441R–00	15 – 6
6GR–24420–10	15 – 20
6GR–24425–00	16 – 20
6GR–24426–00	16 – 27
6GR–24430–00	15 – 12
6GR–24452–00	29 – 27
6GR–24460–01	17 – 12
6GR–24460–20	16 – 41
6CB–24461–00	17 – 9
	18 – 9
6KN–24461–00	18 – 14
6GR–24462–01	16 – 24
6GR–24491–00	16 – 26
6DA–24492–01	16 – 23
6GR–244A1–00	15 – 7
6GR–24501–00	18 – 6
6GR–24560–01	16 – 5
6GR–24561–00	16 – 6
6P3–24563–02	1 – 12
	16 – 8
6P3–24564–00	1 – 13
	16 – 7
6GR–24566–00	16 – 11
6GR–24568–01	16 – 9
6GR–24595–01	18 – 19
6GR–24596–01	16 – 48
6GR–24599–01	18 – 27
6GR–2464E–01	17 – 17
6GR–24864–00	36 – 9
6KN–24864–00	36 – 10
6KN–25415–00	38 – 36
6KN–26393–00	29 – 22
6GR–28100–01	33 – 5
6GR–28100–11	33 – 5
6CB–2812A–00	24 – 9
6GR–41134–00	14 – 13
6GR–41137–00	40 – 1
6KN–41273–00	27 – 7
6GR–41297–00	40 – 5
6GR–42134–00	36 – 30
6GR–42195–00	34 – 12
6BG–42384–00	40 – 9
6DA–42384–00	40 – 15
6GR–42384–00	40 – 12
6GR–42401–23	36 – 26

PART NO. CODIGO Nº	REF. NO.
6GR–42402–01	52 – 3
6GR–42403–00	52 – 4
6X9–4240A–00	52 – 5
6GR–42477–00	2 – 3
6GR–42510–01–8D	37 – 1
6KN–42532–00	27 – 8
6GR–42541–00	7 – 3
6KN–42610–00–8D	2 – 1
6KN–42610–00–CE	2 – 1
6GR–42615–00	30 – 10
6KN–42617–00	29 – 10
	29 – 13
6KN–4261A–00–8D	2 – 2
6KN–4261A–00–CE	2 – 2
6GR–42622–01	30 – 4
6GR–42623–01	30 – 8
6KN–42625–00–8D	30 – 20
6KN–42625–00–CE	30 – 20
6KN–42629–00	2 – 20
6GR–42643–00	2 – 8
6GR–42647–00	2 – 5
6GR–42648–00	2 – 6
6GR–42649–00	2 – 7
663–42662–01	2 – 17
6AW–42663–01	2 – 9
6KN–42675–00	2 – 21
6KN–42676–00	2 – 23
6GR–42677–00	2 – 27
6GR–42678–00	33 – 3
6KN–4267A–00	33 – 2
6LB–4267A–00	33 – 2
6GR–42682–00	33 – 4
6DA–42697–00	36 – 5
6KN–42697–00	33 – 1
6LB–42697–00	2 – 19
6KN–42711–00–8D	29 – 1
6KN–42711–00–CE	29 – 1
6KN–42712–00–8D	30 – 1
6KN–42712–00–CE	30 – 1
6KN–42713–00–8D	30 – 5
6KN–42713–00–CE	30 – 5
6GR–42716–00	40 – 30
	56 – 6
61A–42717–00	35 – 11
6KN–42717–00	29 – 8
6DA–42717–01	40 – 14
6KN–42718–00	29 – 11
6AW–42724–01	40 – 7

PART NO. CODIGO Nº	REF. NO.
6GR–42724–01	40 – 11
6GR–42725–02	29 – 5
676–42726–00	27 – 6
6KN–42726–00	29 – 9
6H1–42726–22	40 – 8
6KN–42727–00	29 – 12
6GR–42740–00–8D	32 – 1
6GR–42740–00–CE	32 – 1
6GR–42743–00	6 – 20
6GR–42744–00	30 – 2
	30 – 6
60V–42747–10	40 – 17
6GR–42748–01	30 – 21
6H4–42748–01	29 – 14
6GR–42753–00	29 – 32
6GR–42758–00	30 – 14
	30 – 23
6GR–42761–00	29 – 6
6GR–42768–01	30 – 19
6KN–42769–00	30 – 11
6GR–42770–00–8D	32 – 5
6GR–42770–00–CE	32 – 5
6GR–42774–00–CA	32 – 3
69J–42774–10	30 – 18
	32 – 9
6GR–42775–00–CA	32 – 7
6AW–42785–00	42 – 4
6EE–42794–41	29 – 36
6EE–42794–51	29 – 37
6EE–42794–71	29 – 36
6GR–42815–00–8D	31 – 1
6GR–42815–00–CE	31 – 1
6GR–42816–01–8D	31 – 2
6GR–42816–01–CE	31 – 2
6GR–42817–01–8D	31 – 3
6GR–42817–01–CE	31 – 3
6GR–42818–00	31 – 14
6GR–42819–00	31 – 15
6GR–42828–00	31 – 4
6GR–42829–00	31 – 5
6GR–42833–00	31 – 10
68T–42835–00	31 – 9
6GR–42835–00	31 – 7
6GR–4311A–00–8D	35 – 1
6GR–4311A–00–CE	35 – 1
6GR–4311B–00–8D	35 – 5
6GR–4311B–00–CE	35 – 5
6GR–43121–00	36 – 37

PART NO. CODIGO Nº	REF. NO.
6GR–43126–00	36 – 24
6GR–43144–00	35 – 17
6G5–43148–00	35 – 22
6GR–43181–00	35 – 19
6GR–43185–00	35 – 20
6GR–43311–02–8D	35 – 15
6GR–43311–02–CE	35 – 15
6GR–43318–00–8D	36 – 7
6GR–43318–00–CE	36 – 7
6GR–43333–00	35 – 12
6GR–43341–00	36 – 1
6GR–43342–00	36 – 2
6GR–43376–01	35 – 28
6GR–43378–10	36 – 44
6GR–43654–00	38 – 17
6KN–43800–01	38 – 1
6GR–43801–00	38 – 4
6GR–43804–00	39 – 3
6GR–43805–00	39 – 2
6GR–4380F–00	39 – 6
6C5–4380G–00	39 – 44
6GR–4380K–00	38 – 21
6KN–4380L–01	38 – 42
6GR–43810–00	38 – 3
6GR–43811–00	38 – 9
6GR–43812–00	38 – 5
6KN–43812–00	38 – 34
6GR–43814–00	38 – 20
6C5–43816–00	39 – 43
69J–43817–00	38 – 44
6C6–43817–00	39 – 41
6GR–43818–00	38 – 27
6GR–4381E–00	35 – 7
6GR–4381F–00	35 – 8
6GR–4381J–00	36 – 20
6KN–43820–00	38 – 37
6KN–43821–00	38 – 35
6GR–43827–00	38 – 18
6KN–43828–00	38 – 47
6EK–43829–00	38 – 50
6GR–4382A–00	36 – 22
6GR–4382E–00	38 – 11
6D8–4382L–00	39 – 34
6GR–43830–00	39 – 13
69J–43831–00	39 – 46
6GR–43835–00	38 – 22
6GR–4383E–01	26 – 5
6GR–4383K–00	42 – 3

PART NO. CODIGO Nº	REF. NO.
6GR–43840–00	38 – 2
6CJ–43841–00	39 – 15
6D8–43843–00	39 – 29
6D8–43844–00	39 – 28
6H1–43844–10	39 – 32
6GR–43845–00	38 – 30
69A–4384F–00	39 – 18
6H1–4384G–11	39 – 31
69J–4384H–00	38 – 10
61A–4384H–10	38 – 40
6CJ–4384M–00	39 – 17
6GR–43851–00	39 – 24
6C6–43853–00	39 – 21
6C5–43854–00	39 – 36
6C5–43855–10	39 – 26
6GR–43856–00	39 – 33
61A–43861–00	38 – 32
6GR–43861–00	38 – 26
6GR–43862–00	38 – 24
6GR–43863–00	38 – 8
61A–43864–00	38 – 39
6GR–43864–01	39 – 12
6GR–4386K–00	39 – 7
6GR–43871–00	38 – 14
6GR–43872–00	38 – 7
6GR–43873–00	44 – 5
	47 – 5
61A–43874–00	38 – 38
61A–43875–10	38 – 41
61A–43876–01	38 – 31
67C–43879–10	39 – 9
6C6–4387G–00	39 – 20
6KN–43880–00	39 – 1
6KN–43881–00	39 – 10
6GR–43882–01	39 – 11
6H1–43883–00	39 – 16
69J–43888–00	38 – 48
69J–4388F–00	38 – 45
6GR–4388F–00	38 – 25
6GR–4388H–00	38 – 43
6GR–43892–00	39 – 4
6GR–43895–00	39 – 35
69J–4389J–00	39 – 23
	39 – 42
6GR–438A0–02	36 – 32
6GR–44117–00	34 – 6
6GR–44120–01	34 – 20
6GR–44121–00	34 – 17

PART NO. CODIGO Nº	REF. NO.
6CE–44122–00	34 – 11
6GR–44150–01	44 – 15
6GS–44150–01	47 – 15
6GR–44150–11	44 – 15
6GS–44150–11	47 – 15
6GR–44194–01	37 – 22
6GR–44311–00	44 – 25
	47 – 25
6GR–44312–00	44 – 27
	47 – 27
6GR–44315–00	44 – 36
	47 – 36
	56 – 24
6GR–44322–00	44 – 28
	47 – 28
	56 – 34
6GR–44323–00	44 – 24
	47 – 24
	56 – 33
6GR–44328–00	44 – 35
	47 – 35
6GR–44331–00	36 – 27
6GR–44332–00	36 – 28
6AW–44336–00	44 – 34
	47 – 34
	56 – 38
6GR–44341–00	44 – 17
	47 – 17
6GR–44352–00	44 – 33
	47 – 33
	56 – 37
6GR–44365–01	44 – 31
	47 – 31
	56 – 23
6GR–44366–01	40 – 20
	43 – 32
	56 – 8
	56 – 14
6GR–44367–01	41 – 12
	56 – 13
6GR–44379–00	44 – 32
	47 – 32
6GR–44381–00	44 – 21
	47 – 21
6GR–44382–00	44 – 22
	47 – 22
6GR–44391–00	40 – 16
6GR–44511–00–CA	37 – 25

NUMERICAL INDEX
INDICE NUMERICO

PART NO. CODIGO Nº	REF. NO.
6GR–44514–00	37 – 19
6GR–44515–00	37 – 20
6GR–44521–00	41 – 11
	56 – 12
6KN–44522–00	30 – 12
6G5–44526–00	35 – 3
6GR–44533–00	37 – 24
6GR–44551–00–CA	37 – 6
6AW–44552–00–CA	37 – 17
6GR–44554–00	29 – 30
6AW–44555–00	37 – 9
6GR–44575–01	37 – 8
6GR–45111–00–8D	41 – 6
6GR–45111–00–CE	41 – 6
6GR–45113–00	41 – 7
	56 – 11
6GR–45127–00	41 – 5
	56 – 9
6GR–45135–00	40 – 28
6GR–45141–00–8D	32 – 13
6GR–45141–00–CE	32 – 13
6GR–45152–00	43 – 34
6GR–45159–01	42 – 14
6GR–45211–00–8D	41 – 14
6GR–45211–00–CE	41 – 14
6GR–45214–01	46 – 10
	49 – 10
6GR–45215–01	46 – 12
	49 – 12
6KN–45224–00	46 – 14
	49 – 14
6KN–45225–00	46 – 16
	49 – 16
6GR–45244–00	44 – 51
	47 – 51
6AW–45251–00	1 – 14
	35 – 2
6GR–45300–06–8D	44 – 1
6GS–45300–06–8D	47 – 1
6GR–45300–06–CE	44 – 1
6GS–45300–06–CE	47 – 1
6GR–45300–16–8D	44 – 1
6GS–45300–16–8D	47 – 1
6GR–45300–16–CE	44 – 1
6GS–45300–16–CE	47 – 1
6GR–45308–00	44 – 3
	47 – 3
6GR–45309–00	44 – 10

PART NO. CODIGO Nº	REF. NO.
6GR–45309–00	47 – 10
6GR–45311–02–8D	44 – 2
	47 – 2
6GR–45311–02–CE	44 – 2
	47 – 2
6GR–45318–00	41 – 10
6GR–45321–00	44 – 9
	47 – 9
6GR–45332–00	45 – 33
6GS–45332–00	48 – 33
6GR–45335–00	44 – 41
	47 – 41
6GR–45341–00	46 – 7
	49 – 7
6GR–45344–00	44 – 40
	47 – 40
6GR–45368–00	42 – 1
6GR–45369–00	42 – 6
6AW–45373–00	1 – 17
	46 – 18
	49 – 18
6GR–45375–01	41 – 19
	44 – 8
	47 – 8
6GR–45376–00	44 – 7
	47 – 7
6GR–45383–00	45 – 38
	48 – 38
6GR–45384–00	45 – 39
	48 – 39
6GR–45393–00	26 – 2
	26 – 7
6GR–45394–01	26 – 1
6GR–45395–00	26 – 6
6GR–45398–00	41 – 15
6GR–45399–00	41 – 17
6GR–45501–00	44 – 49
	47 – 49
6GR–45501–10	44 – 49
	47 – 49
6GR–45539–00	44 – 50
	47 – 50
6GR–45551–00	45 – 8
	48 – 8
6GR–45561–00	45 – 10
6GS–45561–00	48 – 10
6GR–45567–00	45 – 5
	48 – 5

PART NO. CODIGO Nº	REF. NO.
688–45567–01	44 – 45
	47 – 45
688–45567–10	44 – 45
	47 – 45
6GR–45567–10	45 – 5
	48 – 5
688–45567–20	44 – 45
	47 – 45
6GR–45567–20	45 – 5
	48 – 5
688–45567–30	44 – 45
	47 – 45
6GR–45567–30	45 – 5
	48 – 5
688–45567–40	44 – 45
	47 – 45
6GR–45567–40	45 – 5
	48 – 5
688–45567–50	44 – 45
	47 – 45
6GR–45567–50	45 – 5
	48 – 5
688–45567–60	44 – 45
	47 – 45
6GR–45567–60	45 – 5
	48 – 5
6GR–45567–70	45 – 5
	48 – 5
6GR–45571–00	45 – 25
6GS–45571–00	48 – 26
6GR–45576–00	45 – 27
	48 – 28
6GR–45577–00	45 – 28
	48 – 29
6GR–45577–10	45 – 28
	48 – 29
6GR–45577–20	45 – 28
	48 – 29
6GR–45577–30	45 – 28
	48 – 29
6GR–45577–40	45 – 28
	48 – 29
6GR–45577–50	45 – 28
	48 – 29
6GR–45577–60	45 – 28
	48 – 29
6GR–45578–00	45 – 31
6K1–45578–01	48 – 31

PART NO. CODIGO Nº	REF. NO.
6GR–45578–10	45 – 31
6K1–45578–10	48 – 31
6GR–45578–20	45 – 31
6K1–45578–20	48 – 31
6GR–45578–30	45 – 31
6K1–45578–30	48 – 31
6GR–45578–40	45 – 31
6K1–45578–40	48 – 31
6GR–45578–50	45 – 31
6K1–45578–50	48 – 31
6GR–45578–60	45 – 31
6K1–45578–60	48 – 31
6GR–45578–70	45 – 31
6GR–45611–00	45 – 14
6GS–45611–01	48 – 15
6GR–45631–00	45 – 17
	48 – 18
6GR–45632–00	45 – 16
	48 – 17
6GR–45633–00	45 – 18
	48 – 19
6GR–45634–00	45 – 15
	48 – 16
61A–45635–00	45 – 20
	48 – 21
6H1–45668–00	45 – 19
	48 – 20
6GR–45824–00	45 – 6
	48 – 6
6KN–45930–00	46 – 26
6KP–45930–00	49 – 26
6GR–45930–20	46 – 26
6GS–45930–20	49 – 26
6KN–45932–00	46 – 26
6KP–45932–00	49 – 26
6GR–45932–20	46 – 26
6GS–45932–20	49 – 26
6KN–45934–00	46 – 26
6KP–45934–00	49 – 26
6GR–45934–20	46 – 26
6GS–45934–20	49 – 26
6KN–45936–00	46 – 26
6KP–45936–00	49 – 26
6GR–45936–20	46 – 26
6GS–45936–20	49 – 26
6KN–45938–00	46 – 26
6KP–45938–00	49 – 26
6GR–45938–20	46 – 26

PART NO. CODIGO Nº	REF. NO.
6GS–45938–20	49 – 26
6KN–45970–00	46 – 26
6KP–45970–00	49 – 26
6GR–45970–20	46 – 26
6GS–45970–20	49 – 26
6KN–45972–00	46 – 26
6KP–45972–00	49 – 26
6GR–45972–20	46 – 26
6GS–45972–20	49 – 26
6KN–45974–00	46 – 26
6KP–45974–00	49 – 26
6GR–45974–20	46 – 26
6GS–45974–20	49 – 26
6KN–45976–00	46 – 26
6KP–45976–00	49 – 26
6GR–45976–20	46 – 26
6GS–45976–20	49 – 26
6KN–45978–00	46 – 26
6KP–45978–00	49 – 26
6GR–45978–20	46 – 26
6GS–45978–20	49 – 26
6GR–45987–00	46 – 21
	49 – 21
6GR–45997–00	46 – 22
	49 – 22
6GR–45C81–10	46 – 27
	49 – 27
6GR–45D70–20	46 – 26
6GS–45D70–20	49 – 26
6GR–45D72–20	46 – 26
6GS–45D72–20	49 – 26
6GR–45D74–20	46 – 26
6GS–45D74–20	49 – 26
6GR–47445–00	36 – 38
6GR–47716–00	36 – 35
6GR–4820A–01	34 – 1
6Y8–48277–00	50 – 16
6GR–48538–00	36 – 33
6GR–48539–00	36 – 41
6KN–53184–00	2 – 22
6KN–53185–00	2 – 24
6GR–6154A–01	52 – 2
6GR–615A0–10	52 – 1
6KA–6810C–00	51 – 2
6GR–68303–00	34 – 25
6GR–762W0–01	23 – 13
6GR–81115–00	52 – 7
6GR–81115–10	52 – 7

PART NO. CODIGO Nº	REF. NO.
68V–81147–00	11 – 8
6Y8–81315–04	50 – 17
6GR–8132G–00	21 – 16
6GR–81410–00	20 – 3
6GR–81443–00	26 – 10
6GR–81639–01	20 – 22
6GR–81662–00	26 – 3
6GR–81673–00	4 – 5
6AW–81800–02	28 – 1
6AW–81807–02	28 – 3
6AW–81808–00	28 – 8
6AW–81810–01	28 – 16
6AW–81820–00	28 – 18
6AW–81826–00	28 – 19
6AW–81830–00	28 – 2
6AW–81832–01	28 – 7
6AW–81836–00	28 – 4
6AW–81839–00	28 – 14
6AW–8183R–01	28 – 11
6AW–8183T–00	28 – 6
6AW–81840–00	28 – 17
6AW–81842–00	28 – 15
6GR–81845–00	26 – 13
6AW–81846–00	28 – 20
6AW–81850–00	28 – 13
6AW–81854–00	28 – 12
6AW–81857–00	28 – 9
6AW–81862–00	28 – 10
6AW–81891–01	28 – 5
6GR–818D2–00	21 – 17
6GR–81916–00	23 – 4
6GR–81919–01	24 – 12
6GR–81919–11	24 – 13
6GR–81919–20	24 – 14
6Y8–81920–01	54 – 3
6P2–81923–00	23 – 15
6GR–81925–00	23 – 3
6GR–81929–00–9S	23 – 7
6AW–81941–00	28 – 21
6GR–81942–01	20 – 17
6GR–81948–02	21 – 7
6GR–81949–01	23 – 14
68V–81950–00	21 – 24
6GR–81960–00	21 – 13
6GR–81960–11	21 – 13
6GR–81975–00	21 – 14
6EE–81994–41	20 – 28
6EE–81994–51	20 – 29

NUMERICAL INDEX
INDICE NUMERICO

PART NO. CODIGO Nº	REF. NO.
6EE–81994–70	20 – 28
6AH–81996–01	29 – 38
6GR–82105–02	23 – 17
6P2–82113–00	24 – 10
6T4–82117–00	37 – 27
6GR–82117–01	23 – 10
6AW–82119–00	23 – 18
6GR–82119–00	24 – 17
	25 – 3
	25 – 10
6GR–82119–10	23 – 11
	25 – 11
6AW–82119–11	23 – 12
6AW–82119–20	23 – 19
6GR–82131–01	26 – 15
6GR–82147–00	35 – 9
6GR–82149–00	37 – 13
6CB–82151–00	24 – 4
6GR–82151–00	24 – 3
6Y8–82151–00	50 – 19
6G1–82151–01	54 – 9
6TA–82151–01	50 – 18
6CB–82151–10	24 – 5
6GR–82151–10	24 – 2
6CB–82151–20	24 – 6
6CB–82151–30	24 – 7
6KN–82171–00	24 – 24
6GR–82181–00	39 – 5
6GR–82310–03	22 – 1
6GR–82316–00	6 – 17
6A0–82317–01	20 – 20
	20 – 25
	22 – 25
	22 – 31
6GR–82386–00	22 – 9
6GR–82386–10	22 – 11
6DA–82388–00	21 – 20
6GR–82388–01	22 – 12
6GR–82389–00	22 – 15
6GR–82398–00	40 – 31
6GR–82421–00	17 – 16
6Y8–82509–10	50 – 8
6Y8–82521–01	52 – 9
6Y8–82521–11	50 – 15
	52 – 9
6Y8–82521–21	52 – 9
6Y8–82521–31	52 – 9
	54 – 7

PART NO. CODIGO Nº	REF. NO.
6Y8–82521–41	52 – 9
6Y8–82521–51	52 – 9
6KN–82535–00	29 – 21
6GR–82553–00	36 – 17
6Y8–82553–01	54 – 6
6GR–82563–00	29 – 34
6KN–8257G–00	10 – 18
68V–82582–10	25 – 4
6Y8–82582–11	54 – 10
6KN–82588–00	14 – 24
6GR–82589–00	24 – 18
6GR–8258A–11	52 – 6
6KN–82590–01	25 – 1
6LB–82590–01	25 – 1
6GR–82599–00	26 – 8
6GR–8259M–00	25 – 9
6GR–825A8–00	17 – 15
6GR–8272F–01	22 – 3
6GR–8272G–01	22 – 6
6GR–8272U–00	24 – 26
68F–82846–00	24 – 11
6X4–83383–00	50 – 5
6KA–83383–01	21 – 32
6X4–83386–00	50 – 6
6YM–83512–00	53 – 5
6Y9–83553–00	54 – 5
6YM–83553–01	54 – 1
6Y8–83553–02	54 – 8
6GR–83558–00	29 – 26
6YD–8356N–00	54 – 2
4P9–83591–00	21 – 26
6GR–83614–00	21 – 29
6AW–83651–01	12 – 12
6GR–8366B–00	14 – 28
68F–83688–10	11 – 7
6YM–83710–18	53 – 1
6YM–83956–00	53 – 3
6YD–83957–00	53 – 4
6KA–84516–10	51 – 3
6Y8–8454G–00	50 – 11
6KN–85112–00	27 – 1
68F–85119–00	21 – 10
	24 – 21
	27 – 3
6Y8–85371–01	52 – 8
	54 – 4
68F–85516–01	24 – 19
	27 – 2

PART NO. CODIGO Nº	REF. NO.
6GR–85525–00	24 – 29
6GR–85544–00	24 – 8
689–85547–01	16 – 1
68V–85548–01	21 – 23
6GR–85561–01	20 – 4
60V–85564–00	21 – 8
6CE–85564–00	34 – 4
6GR–85586–01	20 – 7
6CJ–85780–02	3 – 46
6GR–85790–00	21 – 27
6GR–85887–00	36 – 14
6GR–85895–00	21 – 1
6GR–85896–00	22 – 20
6KN–8591A–00	21 – 3
6LB–8591A–00	21 – 3
6KN–8591A–10	21 – 3
6GR–8591B–00	21 – 5
6GR–86120–00	6 – 14
6Y8–86260–03	50 – 2
6Y8–86260–12	50 – 2
6AA–86261–01	50 – 3
6AA–86261–22	50 – 3
6Y8–86267–00	50 – 1
6YM–87278–00	53 – 6
6GR–8A411–00	17 – 14
K0F–A3741–00	8 – 5
K0F–A3742–00	8 – 6
K0F–A3743–00	8 – 3
6KN–W0001–01	55 – 1
6GR–W0001–23	56 – 1
6GR–W0005–00	18 – 32
6GR–W0078–01	1 – 19
	56 – 31
6KN–W009A–01–9S	5 – 1
6KN–W009C–01–9S	5 – 11
6GR–W1165–10	4 – 17
6GR–W436G–00–8D	36 – 4
6GR–W436G–00–CE	36 – 4
6GR–W4624–00	9 – 15
6KN–W8145–00	20 – 1
6GR–W85AA–02	24 – 1
6EK–W9010–00	20 – 2
90101–12067	35 – 30
90101–12068	35 – 30
90101–12069	35 – 30
90101–12070	35 – 30
90101–12072	35 – 30
90101–12073	35 – 30

PART NO. CODIGO Nº	REF. NO.
90101–12073	35 – 30
90101–12074	35 – 30
90105–06028	22 – 2
90105–06035	6 – 16
90105–06037	3 – 21
	3 – 23
	3 – 28
	3 – 30
	3 – 42
	9 – 14
90105–06151	12 – 7
90105–06M07	5 – 24
90105–08175	3 – 8
	3 – 15
	5 – 32
	13 – 12
	18 – 29
	21 – 15
90105–08220	3 – 9
	5 – 31
	14 – 14
90105–08277	14 – 12
90105–08279	13 – 14
90105–08M36	11 – 6
90105–10257	46 – 20
	49 – 20
90105–10446	4 – 9
90105–14012	37 – 14
90105–16004	37 – 21
90109–06286	3 – 36
90110–06038	6 – 18
90110–06191	36 – 36
90110–06425	46 – 13
	46 – 17
	49 – 13
	49 – 17
90110–08M05	39 – 47
90110–10053	46 – 5
	49 – 5
90110–10054	46 – 5
	49 – 5
90111–06142	32 – 11
	32 – 16
90111–06144	29 – 31
	32 – 10
	32 – 15
	36 – 6
	36 – 8

PART NO. CODIGO Nº	REF. NO.
90111–06144	36 – 21
90111–06175	30 – 15
	30 – 24
90111–06176	30 – 16
90111–08078	2 – 10
90116–08037	13 – 10
	18 – 30
90116–10067	46 – 1
	49 – 1
90119–06299	15 – 24
90119–06309	16 – 31
90119–06MA6	10 – 11
90119–07234	5 – 9
	5 – 19
90119–07235	5 – 8
	5 – 18
90119–08022	10 – 5
	10 – 10
90119–08175	34 – 2
90119–08176	36 – 3
90119–08187	29 – 4
90119–08196	44 – 39
	47 – 39
	56 – 40
90119–10009	46 – 4
	49 – 4
90119–10024	37 – 18
	41 – 21
	46 – 1
	49 – 1
90119–10040	35 – 14
	40 – 23
	43 – 6
90119–10050	9 – 7
90119–10058	37 – 26
90119–10064	35 – 13
90119–10074	43 – 4
90119–10075	40 – 24
90149–05044	36 – 23
90149–11001	5 – 30
90151–06069	3 – 32
90167–05017	30 – 9
90167–06M00	50 – 12
90170–18009	45 – 9
	48 – 9
90170–35M34	44 – 48
	47 – 48
90171–18M04	46 – 24

PART NO. CODIGO Nº	REF. NO.
90171–18M04	49 – 24
90173–06001	32 – 12
90179–08003	23 – 2
90179–08M34	13 – 11
	18 – 31
90179–14009	36 – 43
90183–02M03	45 – 22
	48 – 23
90185–06M07	34 – 15
	46 – 11
	46 – 15
	49 – 11
	49 – 15
90201–02M00	45 – 21
	48 – 22
90201–06068	34 – 13
90201–06M30	50 – 13
90201–10048	34 – 10
90201–10081	34 – 23
90201–12060	35 – 31
90201–12064	34 – 5
90201–12426	35 – 32
90201–13M19	35 – 33
90201–156J2	31 – 13
90201–15M58	37 – 12
90201–16M55	37 – 11
90201–18029	38 – 15
90201–18030	37 – 23
90201–186F1	14 – 11
90201–19M01	46 – 23
	49 – 23
90201–253K0	48 – 13
90201–40008	45 – 30
90201–51014	37 – 2
90201–54008	45 – 13
90202–08M41	34 – 14
90202–32M19	37 – 10
90202–51001	37 – 5
90206–15M18	31 – 12
90214–35M07	44 – 47
	47 – 47
90240–05002	31 – 8
90249–06M19	35 – 23
90269–05005	20 – 16
90282–05008	45 – 37
	48 – 37
90338–07012	30 – 25
90340–08003	46 – 6

NUMERICAL INDEX
INDICE NUMERICO

PART NO. CODIGO Nº	REF. NO.
90340–08003	49 – 6
90340–18M09	14 – 10
90340–24001	3 – 3
90340–27001	3 – 12
90340–32011	40 – 2
90340–97002	5 – 5
	5 – 15
90344–51019	5 – 4
	5 – 14
90386–10M16	35 – 21
90386–12M61	34 – 22
90386–15M73	31 – 11
90386–20002	35 – 27
90386–49001	37 – 4
90387–06119	20 – 19
	20 – 24
	22 – 24
	22 – 30
90387–06176	21 – 9
	24 – 20
	27 – 4
90387–06289	16 – 30
90387–08104	34 – 3
90387–08M37	29 – 3
90387–08M45	2 – 13
90387–10094	2 – 11
90387–11005	5 – 29
90401–12002	9 – 9
90401–19001	12 – 4
90430–06M03	5 – 25
90430–10004	21 – 28
90430–24239	3 – 4
90440–27005	41 – 13
90440–27006	41 – 13
90445–09063	14 – 17
90445–09095	14 – 20
90445–09104	14 – 16
90445–09304	7 – 14
90445–09M00	7 – 7
90445–13M25	19 – 3
90445–16025	29 – 24
90450–14M05	26 – 4
90450–35003	40 – 29
90460–15227	29 – 35
90462–10033	36 – 12
90464–09028	14 – 23
90464–09129	22 – 28
90464–09M47	22 – 10

PART NO. CODIGO Nº	REF. NO.
90464–09M47	25 – 2
90464–11121	16 – 12
90464–12009	16 – 45
	16 – 47
90464–12010	16 – 46
90464–12012	25 – 5
90464–12015	22 – 19
	40 – 34
90464–12183	10 – 16
	10 – 22
	20 – 11
	21 – 12
	36 – 40
90464–13249	10 – 17
	10 – 21
	16 – 13
	21 – 22
	21 – 31
	22 – 17
	24 – 23
	27 – 5
90464–15195	25 – 13
90464–16015	18 – 33
90464–18004	14 – 29
	14 – 30
	25 – 7
90464–18246	16 – 14
90464–19M45	40 – 33
90464–20181	3 – 45
	10 – 14
	10 – 15
	10 – 20
	14 – 26
	14 – 27
	21 – 19
	22 – 5
	22 – 8
	22 – 14
	22 – 18
90464–29223	18 – 16
90464–30001	24 – 22
90464–32002	21 – 11
90464–36005	36 – 18
90464–44002	25 – 12
90464–55002	36 – 19
90464–66001	43 – 35
	52 – 10
90464–99004	10 – 4

PART NO. CODIGO Nº	REF. NO.
90464–99006	29 – 33
90465–11M10	7 – 10
	14 – 21
	14 – 22
	16 – 10
	16 – 18
	16 – 25
	18 – 20
	36 – 11
	40 – 10
	42 – 2
	42 – 5
	42 – 7
	42 – 10
	50 – 10
90465–11M59	7 – 11
	40 – 13
90465–13M18	52 – 11
90465–13M24	7 – 15
	25 – 6
90465–13M60	16 – 42
90465–13M97	17 – 13
	17 – 18
	18 – 28
	26 – 12
90467–120A7	16 – 39
90467–140A9	16 – 32
	16 – 36
	16 – 43
90467–141A1	17 – 6
	18 – 10
	18 – 15
90467–141A2	16 – 33
90467–150A5	7 – 4
	29 – 29
90467–160A7	29 – 28
90468–18008	34 – 16
	34 – 19
90468–180A0	34 – 18
90480–06M19	19 – 5
90480–10M23	16 – 29
90480–12314	20 – 21
	20 – 26
	22 – 27
	22 – 33
	24 – 28
90480–13034	30 – 17
90480–14M17	32 – 2

PART NO. CODIGO Nº	REF. NO.
90480–14M17	32 – 6
	32 – 14
90480–16015	30 – 13
	30 – 22
90480–20006	51 – 1
90480–20M05	29 – 25
	43 – 24
90480–22M81	29 – 2
90501–10M77	45 – 23
	48 – 24
90501–200A2	43 – 23
90506–16010	35 – 24
91317–06014	4 – 6
91318–03005	39 – 40
91318–03025	39 – 39
91318–05030	39 – 38
91318–05045	39 – 45
91380–04010	36 – 31
91380–05016	44 – 20
	47 – 20
91380–10020	35 – 6
91490–20015	34 – 8
91490–20025	36 – 45
91490–40030	46 – 25
	49 – 25
91690–30020	35 – 25
91690–40018	5 – 10
	5 – 20
91690–50014	10 – 6
91690–60022	35 – 26
91809–08006	5 – 7
	5 – 17
92990–06100	2 – 16
92990–08600	2 – 12
92990–10300	46 – 19
	49 – 19
92995–10600	46 – 2
	49 – 2
92995–14600	37 – 16
93101–30037	44 – 43
	47 – 43
	56 – 29
93101–37001	45 – 36
	48 – 36
	56 – 30
93102–26004	40 – 4
	56 – 7
93102–38008	9 – 10

PART NO. CODIGO Nº	REF. NO.
93102–38008	55 – 17
93102–85010	4 – 7
	55 – 16
93102–90004	4 – 3
	55 – 15
93106–14001	44 – 13
	47 – 13
	56 – 27
93109–26001	44 – 26
	47 – 26
	56 – 28
93210–04279	50 – 9
93210–04N51	39 – 30
93210–064A5	39 – 25
93210–06ME6	36 – 25
93210–07100	41 – 18
	44 – 11
	47 – 11
	56 – 18
93210–09165	1 – 16
	38 – 49
	46 – 9
	49 – 9
	56 – 17
93210–10010	41 – 16
	44 – 4
	47 – 4
	56 – 15
93210–11001	22 – 21
93210–11073	34 – 24
93210–12327	38 – 29
93210–13M63	3 – 40
	13 – 7
	14 – 4
	55 – 12
93210–17MF9	36 – 15
93210–18322	5 – 6
	5 – 16
93210–18397	38 – 16
93210–19123	1 – 15
	46 – 8
	49 – 8
	56 – 16
93210–19MJ3	43 – 18
	56 – 5
93210–23587	38 – 33
93210–24M79	12 – 9
	55 – 21

PART NO. CODIGO Nº	REF. NO.
93210–260A5	4 – 10
93210–26658	3 – 10
	55 – 8
93210–27370	23 – 8
93210–28646	6 – 8
	55 – 5
93210–32172	40 – 3
93210–34633	1 – 7
	43 – 13
	56 – 4
93210–37160	44 – 30
	47 – 30
	56 – 22
	56 – 36
93210–44006	38 – 13
	38 – 19
93210–49003	37 – 3
93210–49046	38 – 6
93210–64488	44 – 12
	47 – 12
	56 – 19
93210–65001	14 – 7
93210–66001	38 – 46
93210–85003	14 – 8
93210–89535	44 – 42
	47 – 42
	56 – 25
93210–97690	44 – 23
	47 – 23
	56 – 20
	56 – 32
93211–08001	44 – 29
	47 – 29
	56 – 21
	56 – 35
93211–26001	45 – 34
	48 – 34
	56 – 26
93306–01501	45 – 26
93311–675A1	45 – 2
	48 – 2
93311–737A2	45 – 35
	48 – 35
93311–944A0	45 – 1
	48 – 1
93332–00042	45 – 29
93332–000A0	45 – 11
93332–000B2	48 – 27

NUMERICAL INDEX
INDICE NUMERICO

PART NO. CODIGO Nº	REF. NO.
93340–69012	45 – 4
	48 – 4
93341–440U5	48 – 30
93390–00033	48 – 11
93399–99967	44 – 46
	47 – 46
93410–46099	37 – 7
93420–36M01	43 – 14
93440–25020	48 – 14
93450–42110	38 – 23
93450–92171	45 – 3
	48 – 3
93501–04011	45 – 24
	48 – 25
93501–08001	39 – 27
93505–32038	38 – 12
	39 – 22
93603–08072	39 – 14
93604–26256	39 – 37
93606–12019	3 – 5
	3 – 6
	3 – 14
	4 – 2
	14 – 15
	41 – 4
	41 – 9
	43 – 7
	43 – 11
	44 – 37
	47 – 37
	56 – 39
93606–16117	45 – 7
	48 – 7
93608–12M05	44 – 38
	47 – 38
93608–16M16	13 – 13
	40 – 25
93700–06002	35 – 16
94581–99044	9 – 11
94702–00447	1 – 18
	5 – 33
95022–06035	20 – 5
95380–06600	2 – 15
95380–10600	46 – 3
	49 – 3
95380–10700	34 – 9
95380–12600	35 – 34
95380–14800	37 – 15

PART NO. CODIGO Nº	REF. NO.
95780–06300	50 – 14
95780–06500	24 – 16
95780–08300	2 – 14
95780–10300	35 – 29
95817–06075	12 – 2
95D95–06012	10 – 19
	16 – 28
	20 – 13
	26 – 14
	30 – 3
	30 – 7
	31 – 6
	35 – 18
	36 – 13
	36 – 39
	36 – 42
	40 – 32
95D95–06014	18 – 24
95D95–06016	14 – 25
	16 – 15
	16 – 21
	16 – 49
	20 – 10
	21 – 6
	21 – 18
	21 – 21
	21 – 30
	22 – 4
	22 – 7
	22 – 13
	22 – 16
	24 – 15
	24 – 27
	24 – 30
	26 – 11
	40 – 18
	43 – 19
95D95–06020	6 – 21
	21 – 4
	29 – 7
	32 – 4
	32 – 8
	40 – 21
	40 – 27
	43 – 31
95D95–06025	6 – 9
	10 – 2
	20 – 18

PART NO. CODIGO Nº	REF. NO.
95D95–06025	20 – 23
	22 – 26
	22 – 32
	23 – 9
	43 – 25
95D95–06030	6 – 5
	6 – 13
	20 – 6
	41 – 2
95D95–06040	43 – 26
95D95–08012	31 – 16
95D95–08016	23 – 6
	23 – 16
	23 – 20
95D95–08020	23 – 5
	24 – 25
95D95–08025	5 – 26
97095–05010	44 – 19
	47 – 19
97513–08545	23 – 1
97580–08535	36 – 29
97595–05516	36 – 16
97602–04310	39 – 8
97607–04208	6 – 3
	6 – 11
97780–40112	27 – 9
97780–40125	51 – 4
97780–50625	21 – 33
97780–60620	21 – 25
	50 – 7
97880–06035	50 – 12
97980–06216	50 – 4
97985–05210	2 – 4
97D95–06012	40 – 6
	42 – 13
	43 – 33
97D95–06018	36 – 34
97E75–08535	34 – 7
97E75–10570	40 – 22
	41 – 3
	41 – 8
	43 – 5
	43 – 9
97E75–10580	43 – 10
97E95–06510	35 – 10
	37 – 28
97E95–06516	17 – 19
	20 – 8

PART NO. CODIGO Nº	REF. NO.
97E95–06516	25 – 8
97E95–06520	21 – 2
	22 – 22
97E95–06530	35 – 4
97E95–06540	34 – 21
97E95–08520	44 – 44
	47 – 44
97E95–08525	42 – 11
97E95–08535	18 – 21
	44 – 14
	47 – 14
98980–05025	3 – 39
	13 – 9
	14 – 6
99002–03600	39 – 19
99002–12600	44 – 16
	47 – 16
99009–55500	45 – 32
	48 – 32
99009–62500	45 – 12
	48 – 12
99480–08030	41 – 20
	44 – 6
	47 – 6

PART NO. CODIGO Nº	REF. NO.

PART NO. CODIGO Nº	REF. NO.